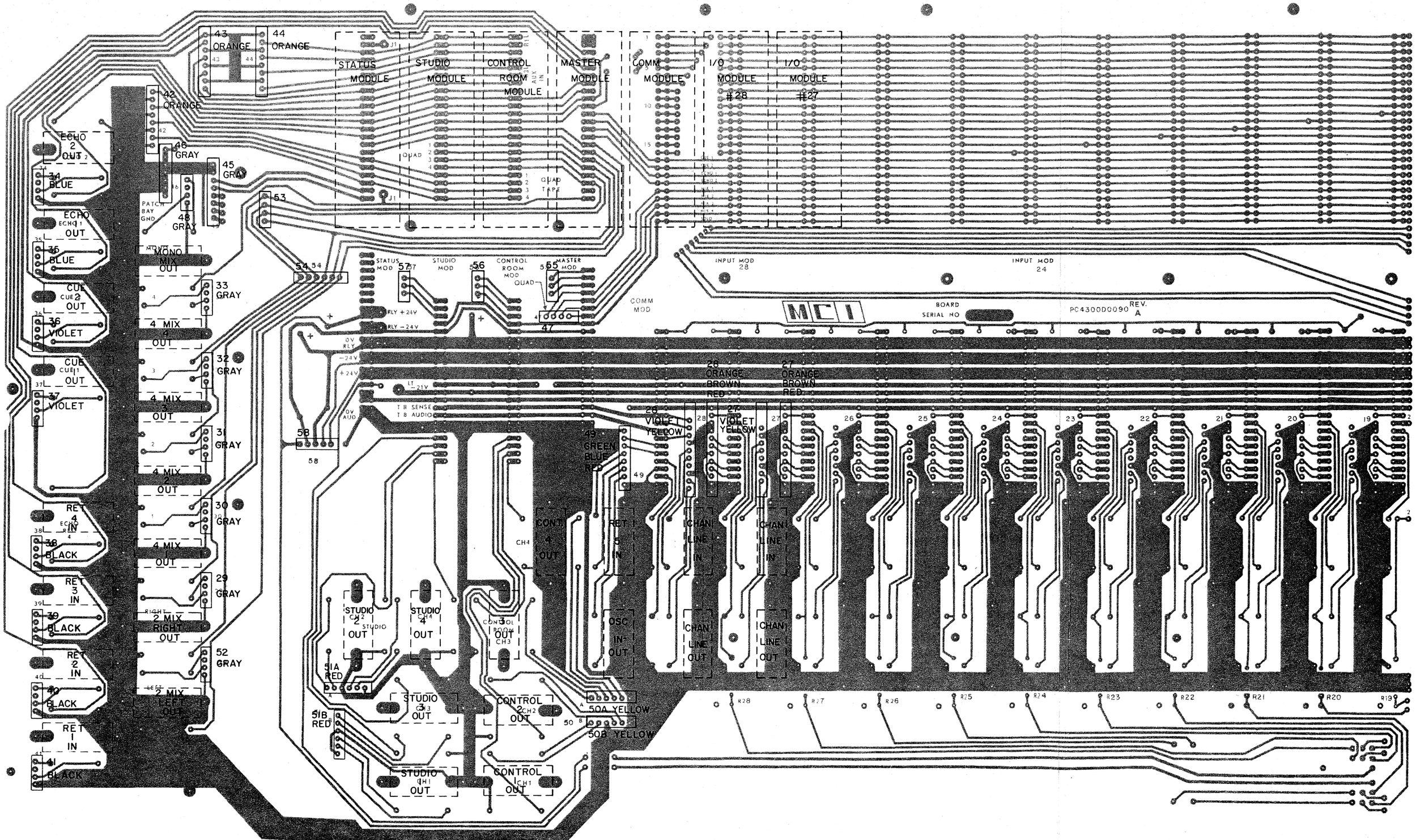

MOTHER BD. LOCATION CHART 43D90
Figure 15 JH-400B Page 6-3