MCI

PROFESSIONAL RECORDING EQUIPMENT

Ft. Lauderdale, Florida

INTRODUCTION

INTRODUCTION

TECHNICAL MANUAL

JH-110 SERIES

PROFESSIONAL

TAPE RECORDERS

ENCOMPASSING ALL JH-110A SYSTEMS

Printed

July 15, 1976
May 20, 1977
February 1, 1979

MCI, INC.
4007 NE 6th Avenue
Fort Lauderdale, Florida 33334 USA
Telephone: (305) 566-2853
Telex: 514 362 MCI FTL

Figure 1

JH-110A PROFESSIONAL TAPE RECORDING SYSTEMS

This manual supplies the information needed to correctly operate and maintain the JH-110A Series of tape recorders. The language used in the explanations and instructions is intended to be easily understood by repair technicians. We have very carefully avoided mathematical explanations whenever possible.

The experienced technician will appreciate the details in the Maintenance (#5) and Troubleshooting (#6) Sections. The less experienced person will find the Description (#2) Section and the Operation (#3) Section very helpful.

The Examples (#4) Section is recommended for every person who is going to operate this machine. It details the use of every control.

INDEX

1.0	Introduction	1-2
	Index	1-3
	Index of Illustrations	1-5
2.0	Description of the System Components	2-1
2.1	The Complete JH-110A Professional Recording System	2-1
2.2	The Tape Transport	2-2
2.3	The Transport Electronics	2-3
2.4	The Audio Control Panels	2-3
2.5	The Audio Electronics	2-4
2.6	The Variable Profile Cabinet Connections	2-4
2.7	The JH-110A Remote	2-5
2.8	Models Available	2-5
3.0	Operation	3-1
3.1	Audio Flow Charts	3-1
	Audio Flow Chart—Record Mode	3-3
	Audio Flow Chart—Repro, Input & Cue Modes	3-5
3.2	QUIOR Circuits	3-7
	QUIOR Operation Diagram	3-8
3.2.1	QUIOR Circuit Defeat	3-7
3.3	Control Logic Flow Charts	3-9
3.3.1	Explanation of the Symbols Used in These Logic Diagrams	3-9
	Tape Load & Stop Commands	3-11
	Play & Record Commands	3-13
	Fast Forward Command	3-15
	Rewind Command	3-17
	Edit Command	3-19
	MVC Control Selector & Tape Lifter Commands	3-21
3.4	Motor Control Systems	3-23
3.4.1	Capstan Speed Control System	3-23
	Signal Switching Logic Diagrams	3-25,26
	Capstan Speed Control System	3-27
3.4.2	Tape Tension System	3-29
	Tape Tension System	3-31
	Return To Zero Locator Block Diagram	3-37
4.0	Examples of Use	4-1
4.1	Transport Motion Controls	4-1
4.2	Reference and Speed Controls	4-3
4.3	Electronic Controls	4-5
4.4	Return To Zero Locator Option	4-7
5.0	Maintenance	5-1
	Equipment Needed	5-1
5.1	Tape Path Mechanical Adjustments	5-2
5.1.1	Height and Zenith Tests	5-2
5.1.2	Turntable Height Adjustment	5-3
5.1.3	Tape Path Height	5-3
5.1.4	Head Height Adjustment	5.3
5.1.5	Head Assembly Azimuth Adjustment	5-3
5.2	Capstan Pinch Roller Test and Adjustment	5-5
5.3	Tape Lifter Test and Adjustments	5-5
5.4	'Dancer Arm' Flutter Filter Test and Adjustments	5-7
5.5	Brake Test and Adjustment	5-9
5.6	Tape Tension Test and Adjustment	5-11
5.7	Capstan Speed Test and Adjustment	5-12
5.8	Manual Velocity Control Test and Adjustment	5-14

5.9	Audio Electronics Alignment	5-14
5.9.1	Reproduce Level Adjustment	5-15
5.9.2	Head Wrap Adjustment	5-15
5.9.3	Azimuth Adjustment	5-16
5.9.4	Reproduce Equalization Adjustments	5-17
5.9.5	Low Frequency EQ Alignment Notes	5-18
5.9.6	Erase Adjustments	5-18
5.9.7	Bias Adjustments	5-19
5.9.8	Record Adjustments	5-21
5.9.9	Cue Trap Adjustment	5-22
5.9.10	Record Equalization Adjustment	5-23
5.9.11	Reproduce—Low Frequency Adjustment	5-23
5.9.12	Record Linearity Adjustment	5-24
5.9.13	Depth of Erasure Adjustment	5-25
5.9.14	Noise Tests	5-27
6.0	Troubleshooting	6-1
6.1	Control Logic Board	6-1
6.2	Analog Torque Board	6-5
6.3	Power Supply and Motor Driver Board	6-7
6.4	Phase Locked Loop Board	6-8
6.4.1	Frequency Strapping on Phase Locked Loop Board	6-9
6.4.2	External Reference Signal Switch	6-10
6.5	Audio Electronics	6-10
6.6	Return To Zero Option	6-10
7.0	Optional Accessories	7-1
7.1	JH-110A Remote Control	7-1
7.2	JH-36 Return To Zero	7-1
7.3	AutoLock	7-1
8.0	System Specifications	8-1
8.1	Dimensions and Weight	
8.1.1	Variable Profile Cabinet	8-4
8.1.2	Overhead Bridge Cabinet	8-5
9.0	Service and Warranty	9-1
10.0	Schematics	
	Index of Schematics	10-1
	Index of Assembly Drawings	10-1
11.0	Spare Parts	11-1
12.0	Upgrading Kits	12-1
12.1	Upgrading a Mono Machine to a Stereo Machine	12-1
12.2	Upgrading a Two Track Machine to a Four Track Machine	12-2
12.3	Installing an Additional Play Head & Play Only Channel	12-2
13.0	Unpacking and Assembly Instructions	13-1

INDEX OF ILLUSTRATIONS

FIGURE	TITLE	PAGE
1	JH-110A Variable Profile Cabinet	1-2
2	JH-110A-8 High Profile Cabinet	2-1
3	JH-110A-14 Variable Profile Cabinet	2-1
4	JH-110A Tape Transport	2-2
5	JH-110A Transport Electronics	2-3
6	JH-110A Audio Control Panels	2-3
7	JH-110A Audio Electronics	2-4
8	JH-110A Cabinet Rear View	2-4
9	JH-110A Remote Control Unit	2-5
10	Audio Flow Chart—Record Mode	3-3
11	Audio Flow Chart—Repro, Input & Cue Modes	3-5
12	QUIOR Circuit Defeat	3-7
13	QUIOR Operation Diagram	3-8
14	Tape Load & Stop Commands	3-11
15	Play & Record Commands	3-13
16	Fast Forward Command	3-15
17	Rewind Command	3-17
18	Edit Command	3-19
19	MVC Control Selector & Tape Lifter Commands	3-21
20	Signal Switching Logic—Variable Reference	3-25
21	Signal Switching Logic—Fixed Reference	3-25
22	Signal Switching Logic—External Reference (Signal Present)	3-26
23	Signal Switching Logic—External Reference (Signal Not Present)	3-26
24	Capstan Speed Control System	3-27
25	Tape Tension System	3-31
26	Return To Zero Locator Block Diagram	3-33
27	Tape Path Alignment	5-4
28	Head Alignment	5-4
29	Tape Lifter Adjustment	5-6,7
30	Dancer Arm Adjustment	5-8
31	Brake Adjustment	5-10
32	Reproduce Electronics Panel	5-15,17,24
33	Bias Electronics Panel	5-19,21
34	Record Electronics Panel	5-22,23,25
35	Bias Trap Adjustment	5-20
36	Record Linearity Graph	5-24
37	Depth of Erasure Alignment	5-26
38	Bias and Erase Board—TP 1	5-26
39	Noise Weighting Network	5-27
40	Reel Motor Driver Simplified Schematic	6-7
41	Return To Zero Digital to Analog Converter—14"	6-12
42	Return To Zero Digital To Analog Converter—10"	
43-50	Not Used	
51-69	See Schematic Index	10-1
70-80	Not Used	
81-87	See Assembly Drawing Index	10-1

ALPHABETICAL INDEX

ACCESSORY EQUIPMENT
- AutoLock 4-4,7-1
- Remote Control 7-1
- RTZ Locator 7-1
- Service Aids 5-2
- Service Equipment 5-1

ANALOG TORQUE
- Block Diagram 3-37
- Loss of Function Chart 6-6
- Quick Reference Chart 6-5
- System Explanation 3-29
- Troubleshooting 6-5

AUDIO
- Adjustments 5-15 to 27
- Flow Charts 3-1,3,5
- Troubleshooting 6-10

BIAS
- Adjustments 5-19,20
- Bias Trap Adjustment 5-20,21
- Panel Description 2-4
- Delay Chart 3-7
- Ramp *(See QUIOR)* 3-7,8
- Switch 2-3, 4-6

BRAKES
- Test and Adjust 5-9,10

CALIBRATE
- Switches 2-3

CAPSTAN
- Block Diagram 3-27
- Control Frequency 3-23
- Pinch Roller Test & Adjust 5-5
- Servo Connections 2-4
- Speed Control System 3-21
- Speed Test and Adjust 5-12,13

CONNECTIONS
- To Cabinet 2-4

CONTROL
- Explanation of Logic Symbols 3-9
- Function Chart 6-3
- Logic Annunciator Definition 6-1
- Logic Annun. Truth Table 6-2
- Logic Flow Charts 3-11 to 21
- Troubleshooting 6-1 to 4

CRYSTAL OSCILLATOR
- Frequency vs Speed 3-23
- Speed Control System 3-21

CUE
- Flow Chart 3-5
- Operation of Controls 4-5
- Switch 2-3
- Trap Adjustmentt 5-22

DANCER ARM
- Test and Adjustment 5-7,8

DESCRIPTIONS
- Audio Control Panels 2-3
- Complete System 2-1
- Tape Transport 2-2
- Transport Electronics 2-3

EDIT
- How to Operate 4-2

EQ
- EQ LEDs 2-3
- Operation of Controls 4-6
- Record EQ Adjustment 5-23
- Repro EQ Adjustment 5-17
- Repro LO EQ Notes 5-18
- Repro LO EQ Adjust 5-23

ERASE
- Adjustments 5-18,19
- Depth of Erase Adjust 5-25,26

EXTERNAL REFERENCE SIGNAL
- Connections 6-10

FUSE
- Description 2-4

HEADS
- Head Shield Operation 4-3
- Azimuth Adjustment 5-4,5

INDEXES
- Assembly Drawings 10-1
- Illustrations 1-6
- Schematics 10-1
- Topics 1-7

INSTALLATION
- Unpacking & Installation 13-1

INPUT
- Connector 2-4
- Flow Chart 3-5
- Switch 2-3

MOTORS
Capstan Motor 3-23
Motor Driver Board 6-7
Reel Motors 3-29 to 31
Troubleshooting 6-7

MVC
Latched MVC Mode 4-2
Operation 4-2
Test and Adjustment 4-7

OUTPUT
Connections 2-4

PHASE LOCKED LOOP
Control Frequency 3-24
Frequency Jumpers 6-10
Phase Comparator 3-24
Reference Signal 3-24
Reference Switching Logic 3-26,27
Speed Control System 3-23
Tachometer Signal 3-24
Troubleshooting 6-8,9,10

POWER SUPPLY
Chassis 2-4
Troubleshooting 6-7

QUIOR *(Bias Ramp)*
Circuit Explanation 3-7,8
Defeat Circuit 3-7
Delay Chart 3-7

RECORD
Adjustments 5-21
Card Panel 2-4
Flow Chart 3-3
Linearity Adjustment 5-24,25
Noise Test 5-27
Operation 4-2,4-6

REMOTE CONTROL
Connector 2-4
Description 2-5

REPRODUCE
Azimuth Adjustment 5-16
Card Panel 2-4
Flow Chart 3-5
Level Adjustment 5-14
Operation 4-6

RTZ LOCATOR
Block Diagram 3-37
Operation 4-7
Troubleshooting 6-10

SAFE
Switch 2-3

SPARE PARTS
Recommended Lists 11-1

SPECIFICATIONS
Electronic 8-1
Mechanical 8-4

TACHOMETERS
Capstan Tach 3-24
Reel Motor Tachs 3-30
RTZ Tach 3-33

TAPE
Alignment 5-2

TAPE PATH
Azimuth Adjustment 5-3,4
Cap. Pinch Roller Test & Adj. 5-5
Dancer Arm Test & Adjust 5-7,8
Head Height Adjustment 5-3
Head Wrap Adjustment 5-15
Tape Break Sensor 4-1
Tape Lifter Test & Adjust 5-5
Turntable Height Test & Adj. 5-3
Zenith Test & Adjustment 5-2,3

TAPE TENSION
Block Diagram 3-31
Idle Tension 4-1
System Explanation 3-31,32
Test & Adjustment 5-11,12

TAPE LIFTERS
Manual 4-3
Operation 4-1
Test & Adjustment 5-5

TAPE VELOCITY INDICATOR
Description 2-5

TORQUE LIMIT
Explanation 3-30
Maximum Torque Chart 4-5
Use of Switches 3-30,4-3,4

VCO
Operation 4-3
Speed Control System 3-24

WARRANTY
Limited Warranty 9-1
Service 9-1

DESCRIPTION

DESCRIPTION

2.0 DESCRIPTION OF THE SYSTEM COMPONENTS

2.1 THE COMPLETE JH-110A PROFESSIONAL RECORDING SYSTEM

The JH-110A Series of recorders consists of a JH-110 transport, from one to eight channels of audio electronics, and a power supply. Special broadcast and mastering machines are also available, and some of the systems are offered in 10½ inch, 14 inch and/or 1000m DIN reel sizes. The systems are available unmounted *(standard 19 inch rack mountable)*, or mounted in the variable profile cabinet shown below or in an all-aluminium overhead bridge cabinet.

The System shown here is a 4-track model with the standard RTZ I. The power supply mounts in the base of the cabinet. The System is also available in playback only versions.

Heavy duty industrial casters make this unit easy to move. Recessed carrying handles are useful when moving over door sills or steps.

All audio and power connections are out of the way in the rear of the cabinet.

Figure 2

Figure 3

2.2 THE JH-110A TAPE TRANSPORT

The JH-110A tape transport shown below may be a ¼ inch machine or a ½ inch machine. All of the features shown here are standard.

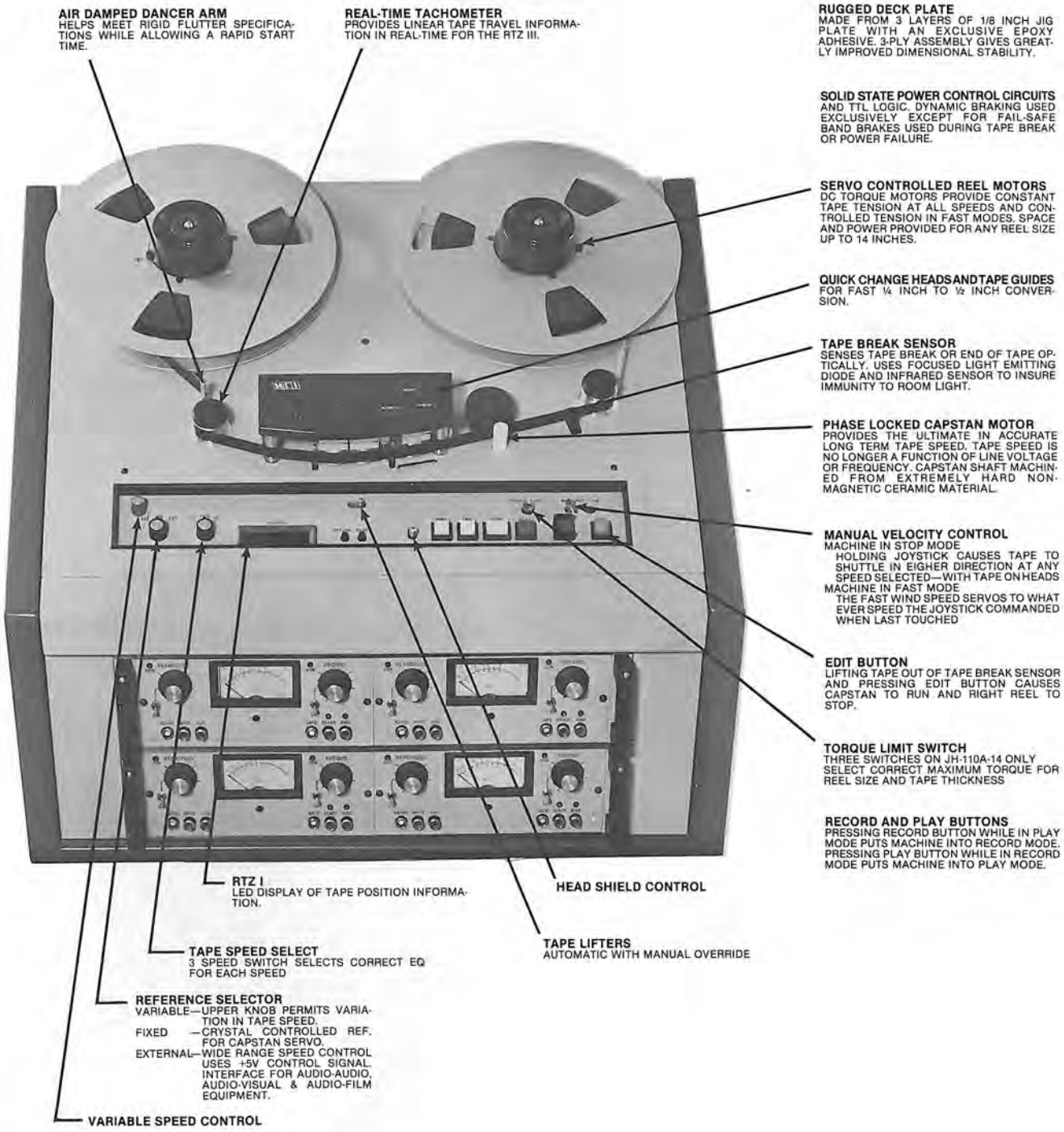

Figure 4

2.3 THE JH-110A TAPE TRANSPORT ELECTRONICS

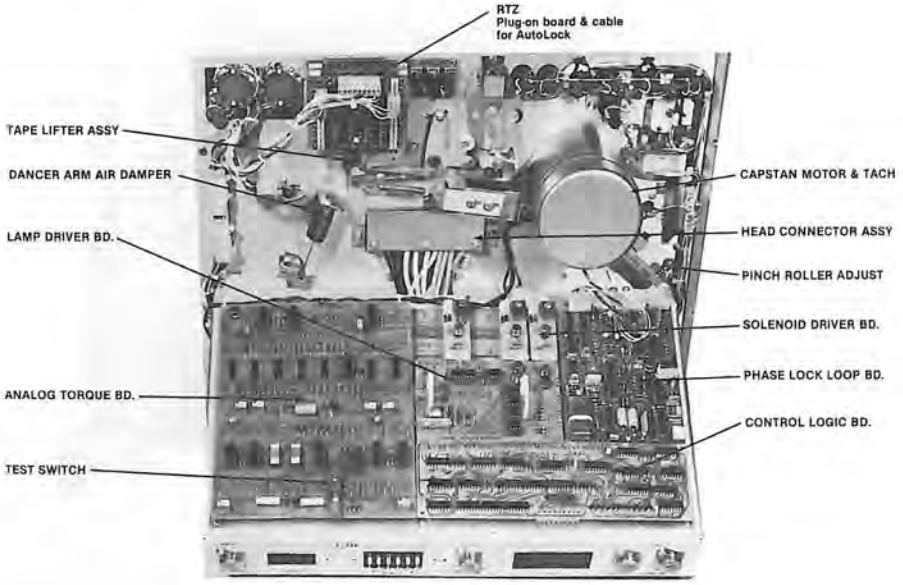

Figure 5

2.4 THE JH-110A AUDIO CONTROL PANELS

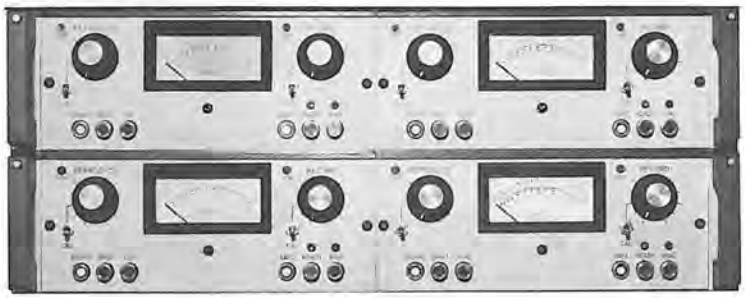

Figure 6

Two channels of audio electronics will fit side by side in each drawer. These electronic drawers are standard 19 inch rack mountable.

Each channel has its own clearly marked controls. Each channel has a large, illuminated VU meter.

Both RECORD and REPRODUCE LEVEL control have CALIBRATE switches. These switches insure a standard record level and a standard reproduce level on each channel when operating from a known signal level.

REPRO, INPUT, and CUE switches are mechanically interlocked so that pressing any one of the three releases the other two. SAFE and READY switches are interlocked in the same way.

The BIAS button switches the VU meter to read BIAS CURRENT in that channel.

An LED is provided on each RECORD and each REPRODUCE circuit to show whether the EQ circuits are switched to CCIR or NAB. *(LED is ON for CCIR, and OFF for NAB.)*

2.5 THE JH-110A AUDIO ELECTRONICS

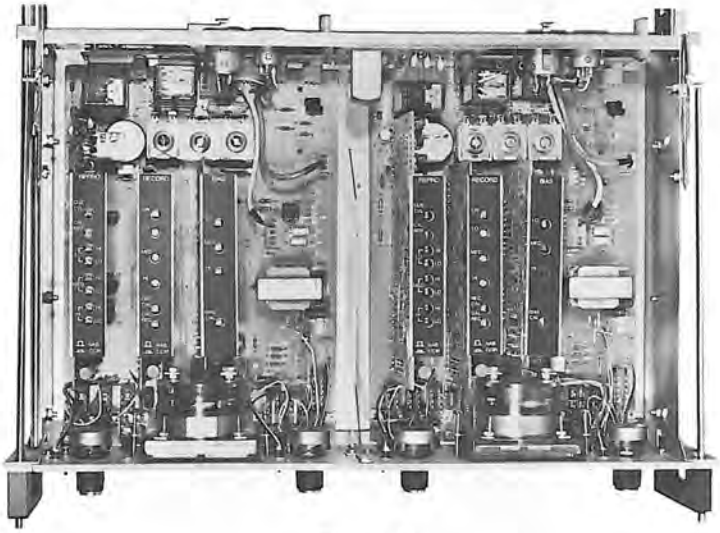

Figure 7

REPRODUCE, RECORD, and BIAS circuits are on individual plut-in cards which may be interchanged from channel to channel.

All adjustments are clearly marked.

The audio electronics drawer is fully operational when pulled out to either of the extended positions. All alignment adjustments are accessible in the first position. Rear connections are accessible when the drawer is extended to the second position.

2.6 THE VARIABLE PROFILE CABINET CONNECTIONS

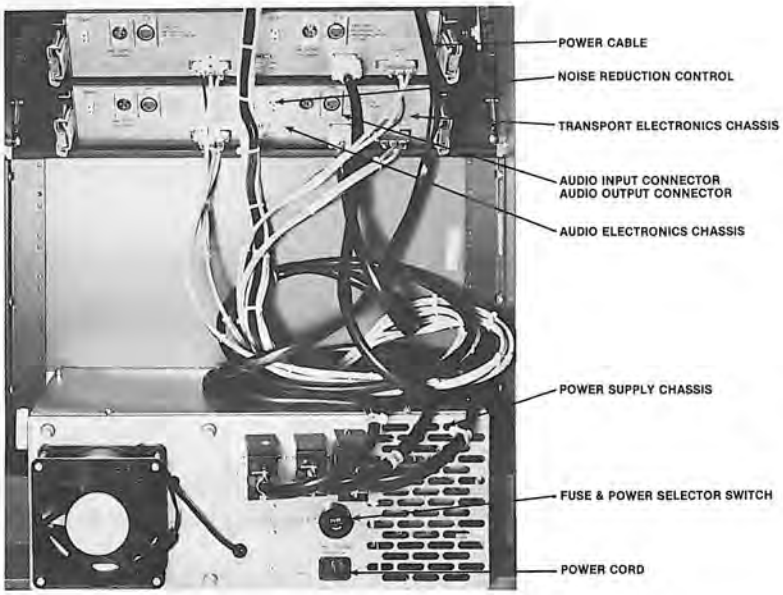

Figure 8

2.7 THE JH-110A REMOTE

Figure 9

The Remote Control unit duplicates all of the function control switches on the tape transport except the EDIT button, including a MODE switch which allows crystal controlled speed or variable speed, and the variable speed control.

2.8 MODELS AVAILABLE

The JH-110 Series encompasses the following systems:

1. The JH-110A System—max. 10½" reel, 3 speed transport, DIN hubs optional
2. The JH-110A-14 System—max. 14" reel, 3 speed transport, DIN hubs optional
3. The JH-110A-8 System—max. 10½" reel, 3 speed transport, 4-tk ½" conversion kit optional
4. The JH-110BC System—max. 10½" NAB or 1000m DIN, 2 speed transport
5. The JH-110M System—max. 14" reel, 3 speed transport, DIN hubs optional *(specify particular disc cutting system to be used with for proper JH-110M model)*

All systems come standard 19" rack mountable, in the unique variable profile cabinet *(except the JH-110A-8)*, or the all aluminium overhead bridge cabinet.

There are over 70 models of the various JH-110 Series recorders currently available including playback only systems. For detailed information contact MCI or your MCI dealer.

OPERATION

OPERATION

3.0 OPERATION

In this section we have included many simplified FLOW CHARTS and simplified BLOCK DIAGRAMS of the subsystems included in this recording system. We have purposely kept the explanations as non-technical as possible. We want the operator of this equipment to acquire a basic understanding of the functions of the system whether he has a full technical education or not.

The experienced technician should find this section especially helpful since it will save much of the time usually spent in becoming familiar with a new device.

Technicians who are thoroughly familiar with these recording systems should be able to isolate any problem by using the enclosed FUNCTIONAL diagrams.

3.1 AUDIO FLOW CHARTS *(See Fig. 10, Page 3-3, and Fig. 11, Page 3-5)*

These flow charts show the heart of the recording system. This is WHAT THE COMPLETE SYSTEM ACCOMPLISHES. Figure 10 shows all of the AUDIO FUNCTIONS which occur during the RECORD mode, and Figure 11 shows all of the AUDIO FUNCTIONS which occur during the REPRODUCE, the INPUT, and the CUE modes.

NOTES:

1. These charts represent what is happening in EACH CHANNEL ASSEMBLY, i.e. if your machine is a four track model, all of these functions will be happening in each of the four electronic assemblies.

   There is ONE EXCEPTION to the above. ONLY ONE MASTER OSCILLATOR is provided for ALL channels.

2. The TAPE TRANSPORT provides the signals which determine:

   A. Which EQ *(equalization)* circuit is used. EQ circuits in all channels are switched by the Transport Speed Selection switch.

   B. Whether the RECORD-PLAY relay is activated or not.

      The transport RECORD button sends a command to EACH CHANNEL. READY and SAFE buttons are provided on EACH channel to determine whether the RECORD RELAY is to be activated on THAT CHANNEL.

      ONLY channels which have their READY button depressed will go into RECORD mode when the TRANSPORT RECORD button is depressed.

ADDITIONAL INFORMATION AVAILABLE ON THESE FLOW CHARTS:

1. Dotted lines show which printed circuit board contains each FUNCTION.
2. Connector numbers are shown at junctions between boards.
3. Switching conditions which must be met for each mode are shown on the FLOW CHART.
4. Board titles and connector numbers correspond to the complete schematics found in Section 10 of this manual.

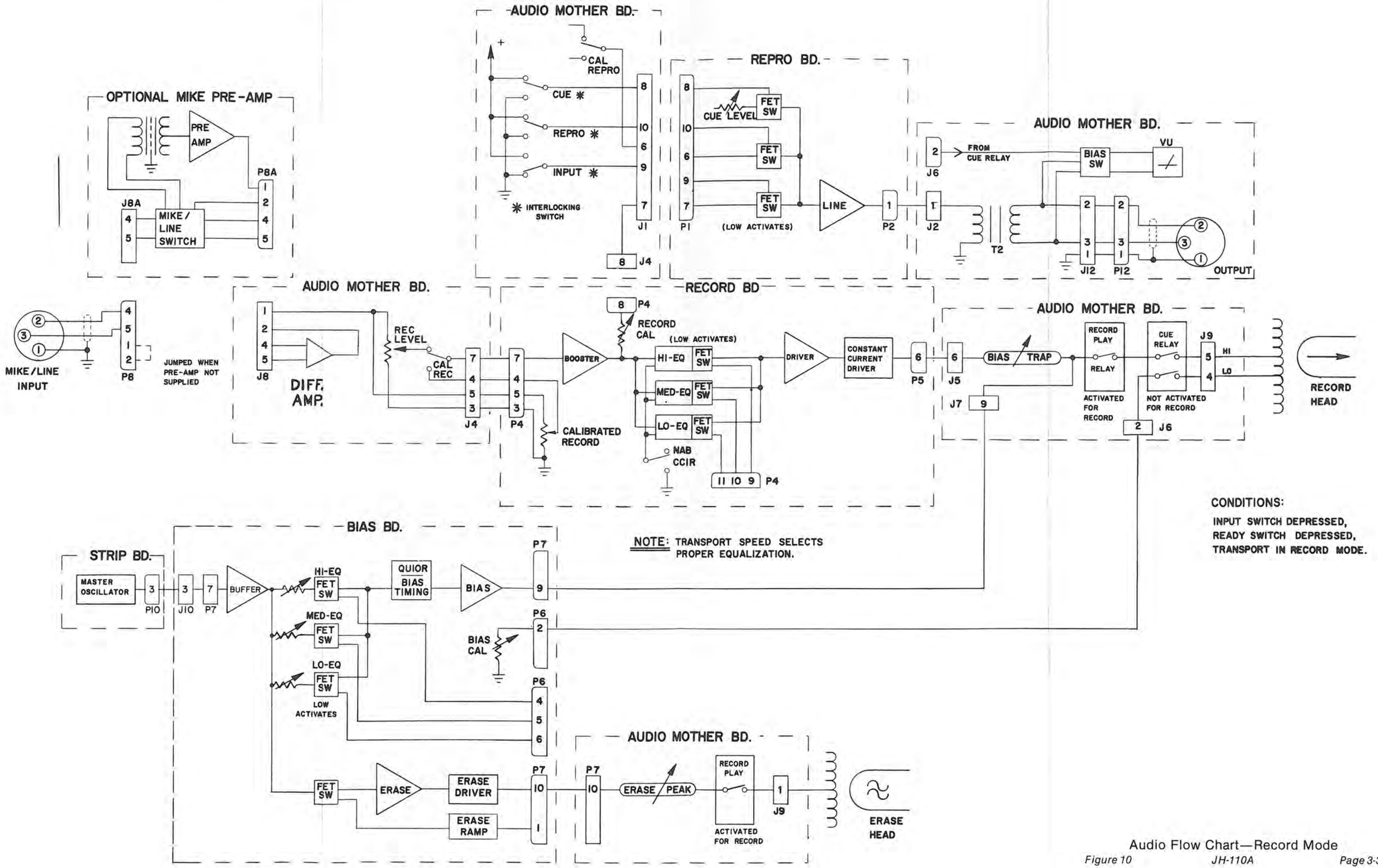

Audio Flow Chart—Record Mode

Figure 10

NOTES: 1. TRANSPORT SPEED SELECTS PROPER EQUALIZATION.

2. WHEN SYNC MODE IS DESIRED (SOME CHANNELS IN CUE, SOME IN RECORD):

DEPRESS SAFE SWITCH IN CHANNELS WHICH ARE TO BE PLAYED
DEPRESS READY SWITCH IN CHANNELS WHICH ARE TO BE RECORDED

3. CHANNELS WHICH ARE IN CUE MODE WITH READY SWITCH DEPRESSED:

MONITOR THE RECORD HEAD IN PLAY MODE
MONITOR THE INPUT LINE IN RECORD MODE

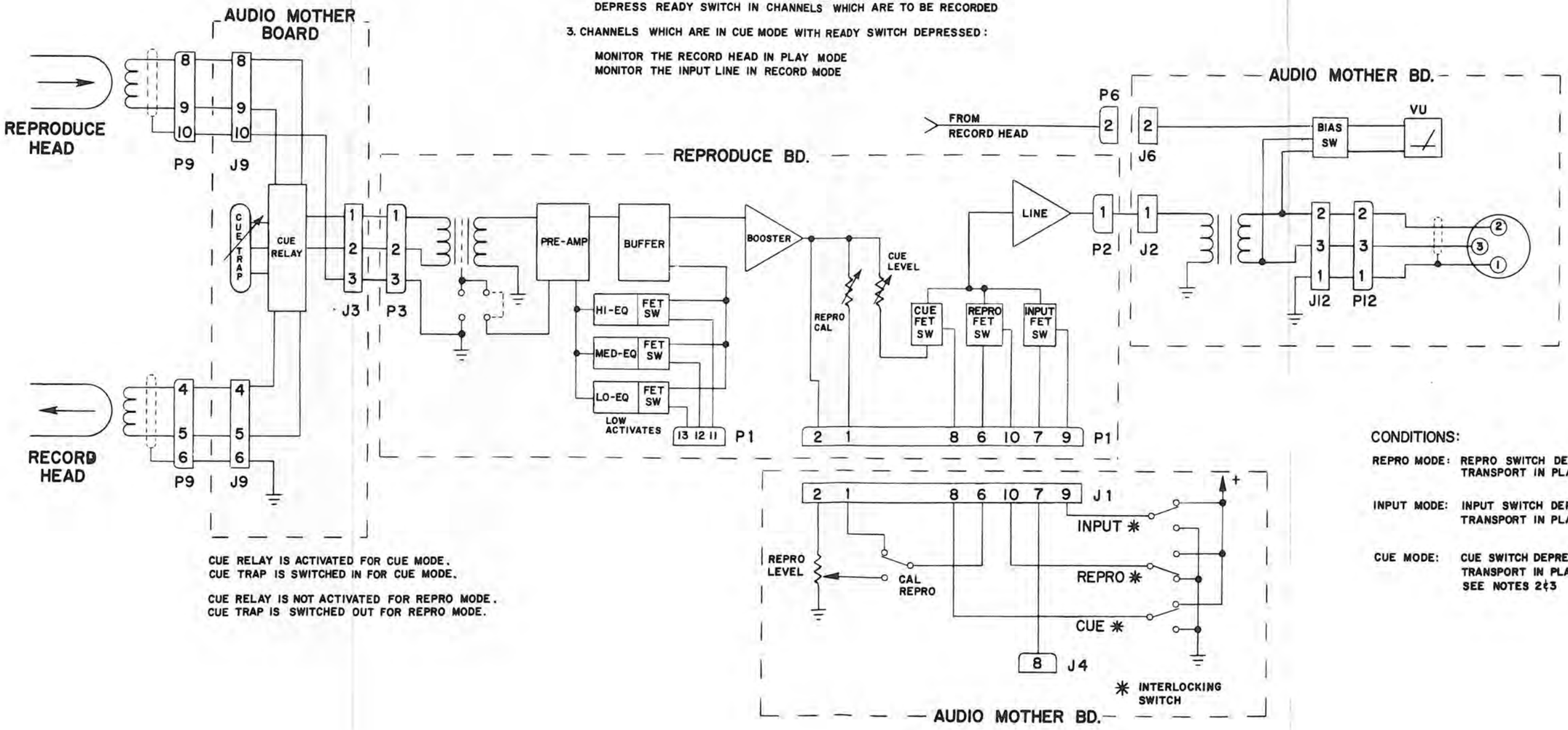

CUE RELAY IS ACTIVATED FOR CUE MODE.
CUE TRAP IS SWITCHED IN FOR CUE MODE.

CUE RELAY IS NOT ACTIVATED FOR REPRO MODE.
CUE TRAP IS SWITCHED OUT FOR REPRO MODE.

CONDITIONS:

REPRO MODE: REPRO SWITCH DEPRESSED
TRANSPORT IN PLAY OR RECORD

INPUT MODE: INPUT SWITCH DEPRESSED
TRANSPORT IN PLAY OR RECORD

CUE MODE: CUE SWITCH DEPRESSED
TRANSPORT IN PLAY MODE
SEE NOTES 2&3

Audio Flow Chart—Repro, Input & Cue Modes

3.2 QUIOR CIRCUITS *(See Bias & Erase Schematic, Page 10-7)*

Bias timing circuits *(called QUIOR or QUiet Initiation Of Record)* are provided to permit editing or overdubbing without the twin problems of OVERLAPPING RECORDINGS at the beginning and BLANK SPOTS at the end of the inserted material.

These two problems are caused by the physical distance between the ERASE head and the RECORD head. When the record circuit is activated, both erase and bias circuits must be turned ON. If we activate BOTH heads at the same time, a piece of tape **equal in length to the distance between the two heads** will not be erased, but will have a BIAS signal superimposed on the original recording. *This is NOT a complete erasure.* When the FULLY ERASED tape arrives at the record head, normal recording begins.

When the edited section is complete, record mode is turned OFF. If we turn OFF the ERASE current and the BIAS current at the same time, the tape will be completely blank for the distance between the erase head and the record head.

Therefore, we have DELAYED the TURN ON and the TURN OFF of the BIAS CURRENT in the RECORD head long enough for the tape to travel between the two heads. Since the distance between the heads is constant, the delay time is directly proportional to the TAPE SPEED. The delay time is shown on the chart below:

TAPE SPEED	APPROXIMATE DELAY TIME
30 ips	42.6 ms
15 ips	85.2 ms
7.5 ips	170.4 ms
3.75 ips	340.8 ms

When inserting new program material on a tape, PUNCH-IN and PUNCH-OUT noise must be kept to a very low level. One of the major contributors to this noise is a sudden change in BIAS and/or ERASE current. To minimize this noise, BOTH BIAS and ERASE currents are switched ON and OFF through a RAMP circuit which provides an optimum slope. The controlled slope of bias and erase turn-on and turn-off produces a minimum of noise. The bias delay circuits correct the timing problems associated with proper erasure of original recorded material. Together, these QUIOR circuits produce an unusually quiet punch-in and punch-out sequence.

Figure 13 on page 3-8 shows the action of the bias timing circuit when editing a previously recorded tape.

3.2.1 QUIOR CIRCUIT DEFEAT

If some recording procedure requires the BIAS CURRENT to be applied immediately after RECORD mode is initiated, a simple PC board change will defeat the delay circuits. The following change must be made to the bias and erase board in each channel:

PROCEDURE:

1. Unsolder and lift ONLY the ANODE end of CR2.
2. Unsolder and remove CR3.
3. Extend the lead from the ANODE end of CR2. Insulate this wire so that it cannot short to other components or lands.
4. Solder the extended lead to the land which originally held the ANODE end of CR3.

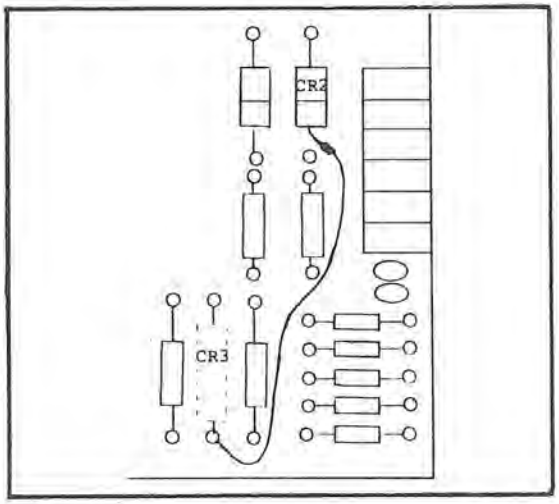

Figure 12 2700-0055 BIAS & ERASE

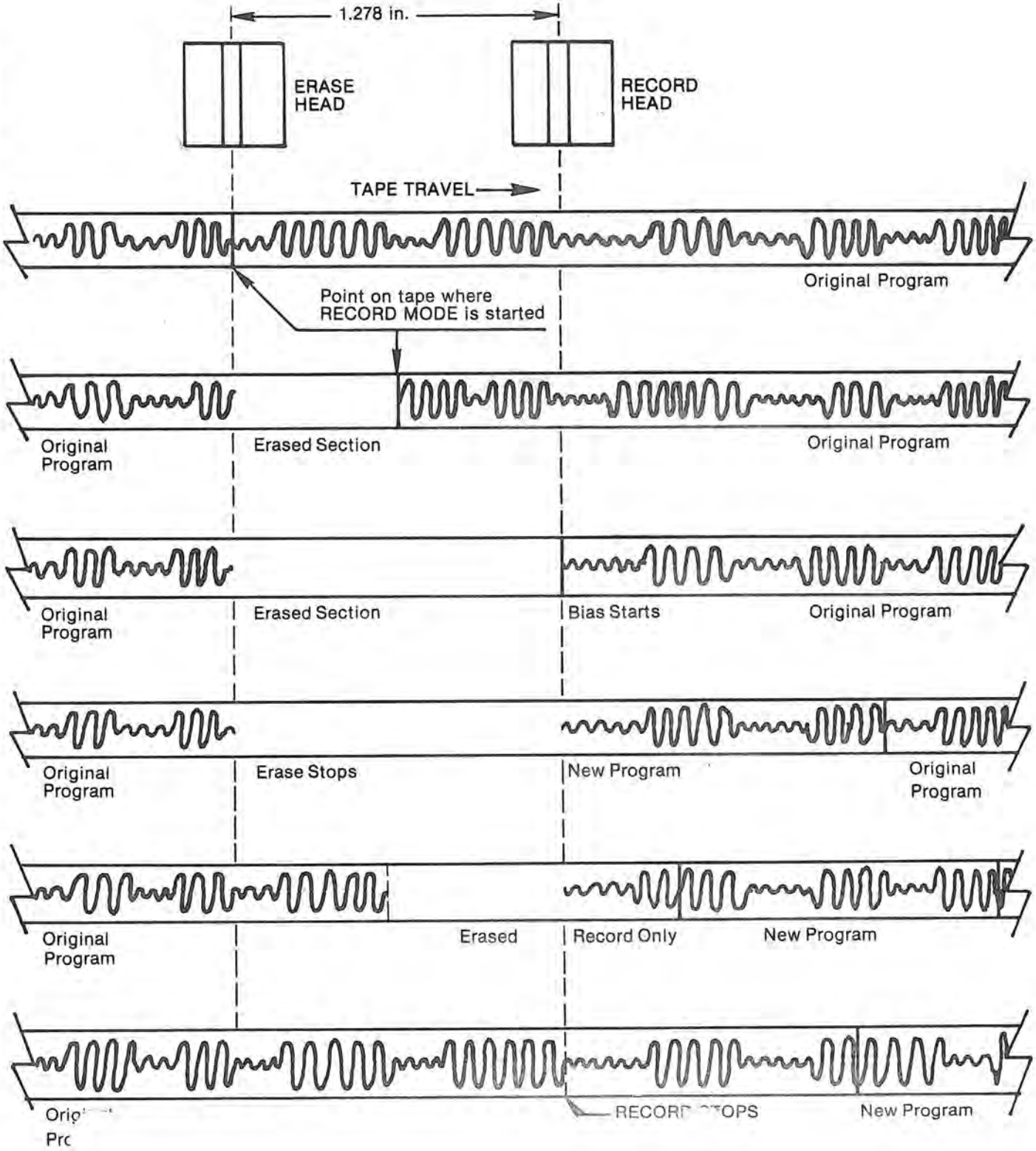

1. RECORD mode is initiated. ERASE head is turned ON.
2. Original program is being erased. RECORDING has not started.
3. BIAS ramps ON. RECORDING starts.
4. OVERDUB is completed. RECORD mode is turned OFF. ERASE head turns OFF. BIAS remains ON.
5. RECORDING continues as long as BIAS remains ON. ERASE is OFF.
6. BIAS turns OFF. No "hole" is left in the recording.

Figure 13

3.3 CONTROL LOGIC FLOW CHARTS *(See Fig. 14, Page 3-11 thru Fig. 19, Page 3-21)*

For a complete Schematic of the Control Logic Board, See Figure 59, page 10-19.

The purpose of these Logic Flow Charts is to provide a simplified diagram of the functions which are generated by pushing one of the transport control buttons.

A large number of cross connected "ENABLE" and "INHIBIT" signals have been purposely left out in these charts.

Where an input to a logic symbol is shown with no connection, at least one, and sometimes as many as three, other conditions must be met before the function is either enabled or inhibited.

"HI" or "LO" markings show the logic state when the button has been activated. Letters and numbers show the connectors which carry signals ON or OFF the board.

3.3.1 EXPLANATION OF THE SYMBOLS USED IN THESE LOGIC DIAGRAMS

HI	**LOGIC STATE**	Since TTL *(Transistor-Transistor Logic)* is used in this MCI tape transport. The HI state means that the potential is between +3.4 volts and +5.0 volts.
LO	**LOGIC STATE**	The LO state for TTL logic is between +0.6 volts and 0.0 volts.
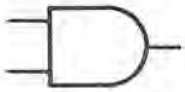	**AND GATE**	This gate "logically" sums two or more commands. The number of lines going into the left of the symbol show the number of commands being summed. ALL input commands must be HI to activate the gate. The output will be HI if ALL inputs are HI. If ANY SINGLE input is LO, the output will be LO.
	NAND GATE	This gate is identical to the one above except the output is inverted. Input circuits and rules of operation remain the same. When ALL inputs are HI, the output will be LO. If ANY SINGLE input is LO, the output will be HI.
	OR GATE	Each input shown going into this gate can individually control the output. If either one of the inputs is HI, the output will be HI. If ALL the inputs are LO, the output will be LO.
	NOR GATE	This gate is identical to the one above except the output is inverted. If either one of the inputs is HI, the output will be LO. If ALL the inputs are LO, the output will be HI.
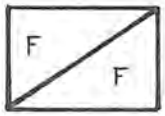	**FLIP-FLOP**	This device uses two NAND gates or two NOR gates to perform a LATCHING FUNCTION. Two inputs and two outputs are available simultaneously. The two outputs are always inverted, one HI, one LO. Input signals cause the outputs to switch. Output A will change from HI to LO at the same time that output B changes from LO to HI. Inputs may be either DC level shifts or momentary pulses.

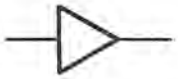

BUFFER

This gate isolates one logic function from another without changing levels. A HI input produces a HI output. A LO input produces a LO output.

INVERTER

This gate isolates logic functions and inverts the levels. A HI input produces a LO output. A LO input produces a HI output.

SWITCH

Switches shown in these logic diagrams are momentary pushbutton types, but they have "holding circuitry" *(Flip-Flops)* to enable them to remain in the ON condition until another button is pushed.

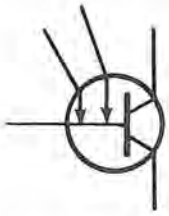

LIGHT ACTIVATED TRANSISTOR

The TAPE LOAD SENSOR uses an infra-red light emitting diode *(LED)* coupled with an infra-red sensitive transistor.

NOTES:

1. Numbers shown inside the LOGIC SYMBOLS refer to the IC numbers on the CONTROL LOGIC BOARD.

2. The symbol shown below shows connections TO or FROM the CONTROL LOGIC BOARD. The first number is the connector number; the second number is the pin number.

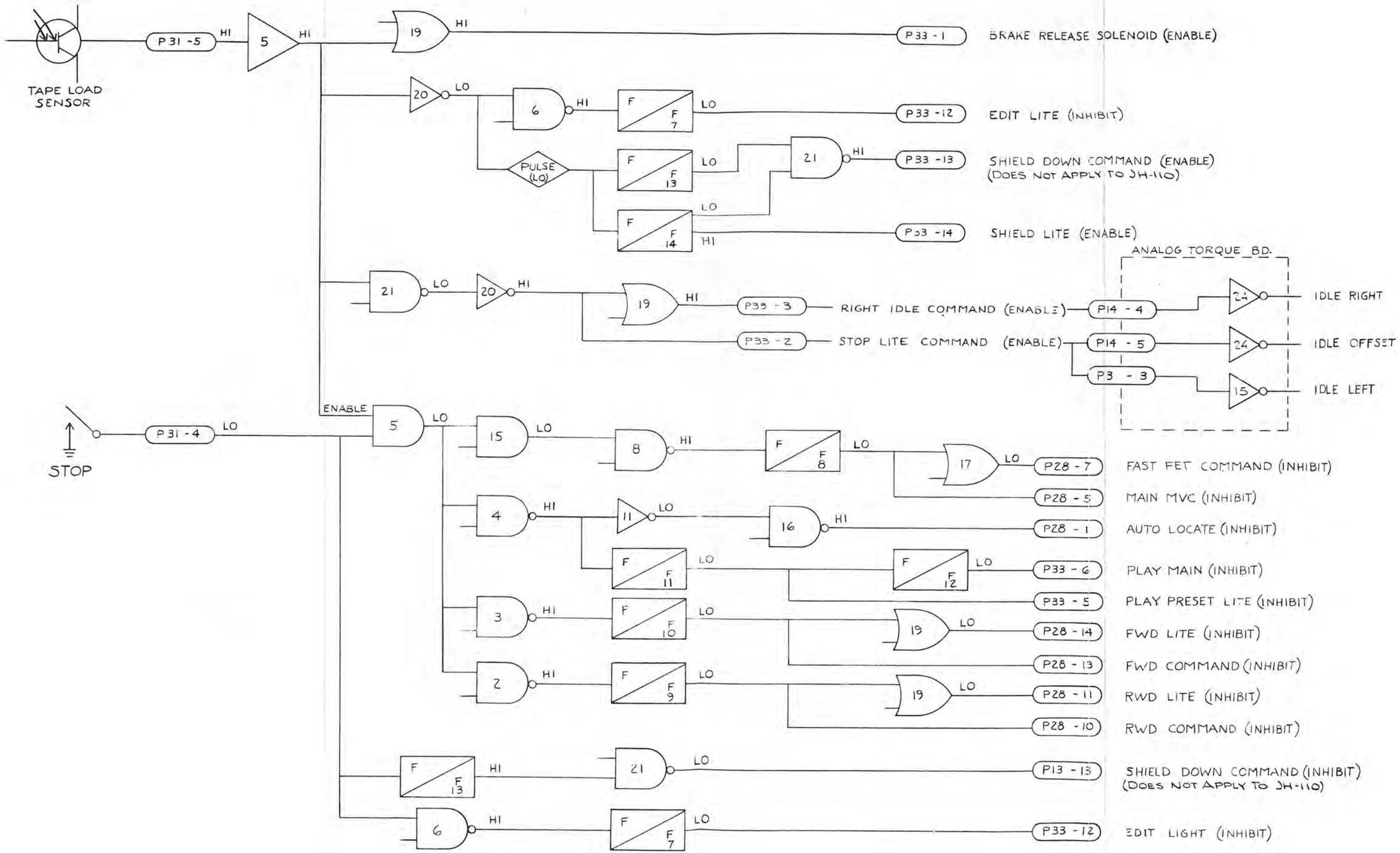

Tape Load & Stop Commands

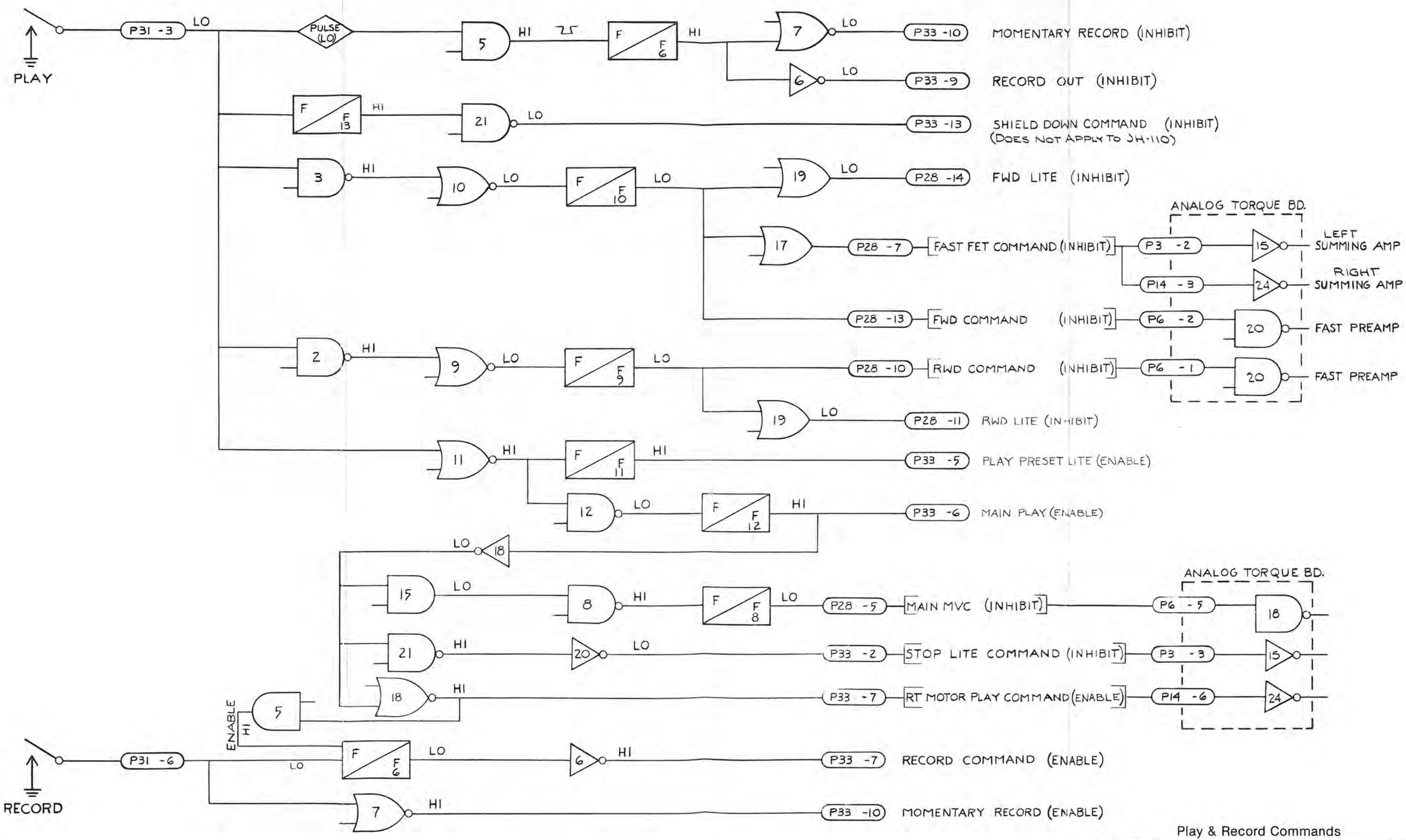

Play & Record Commands

Figure 15

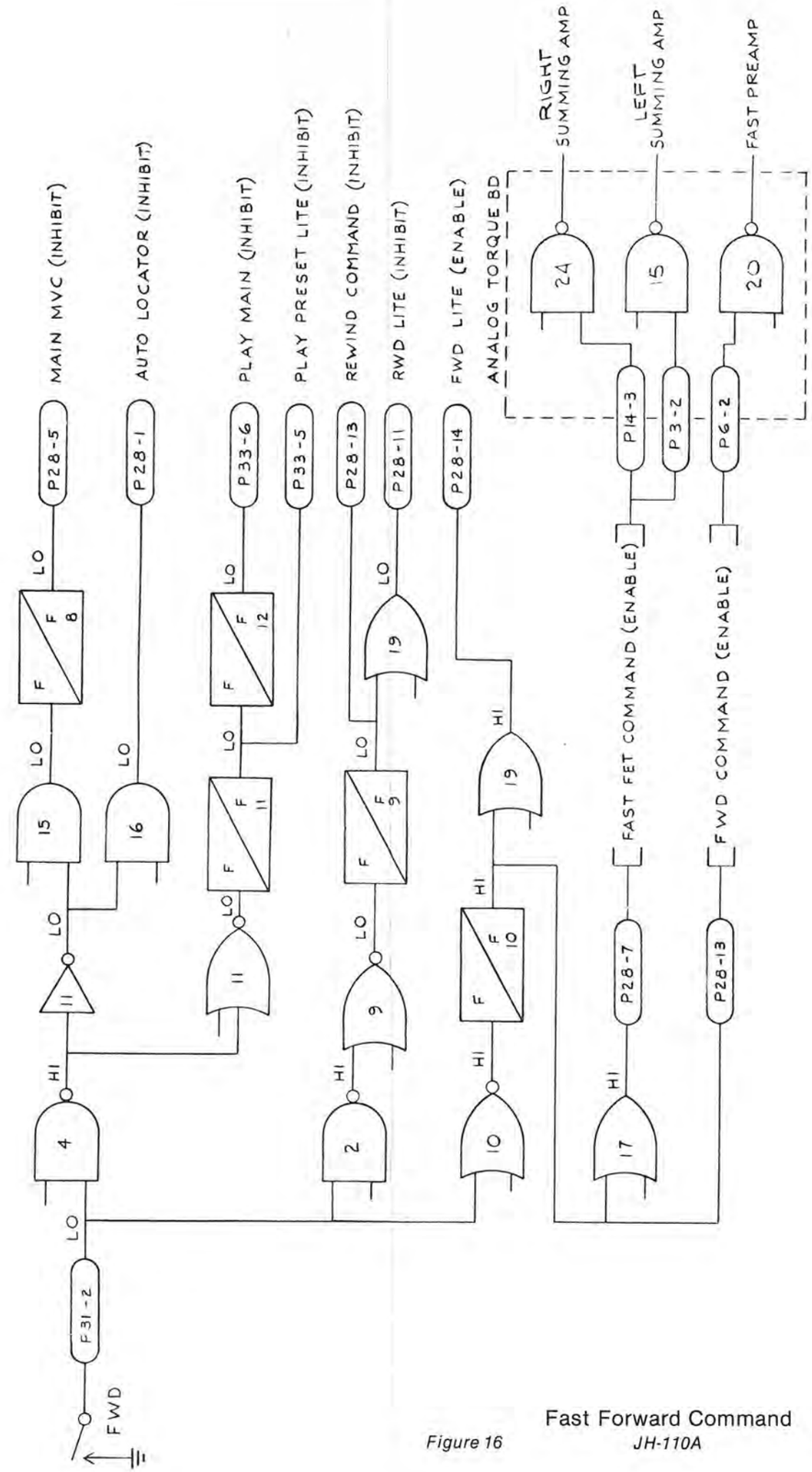

Fast Forward Command

Figure 16

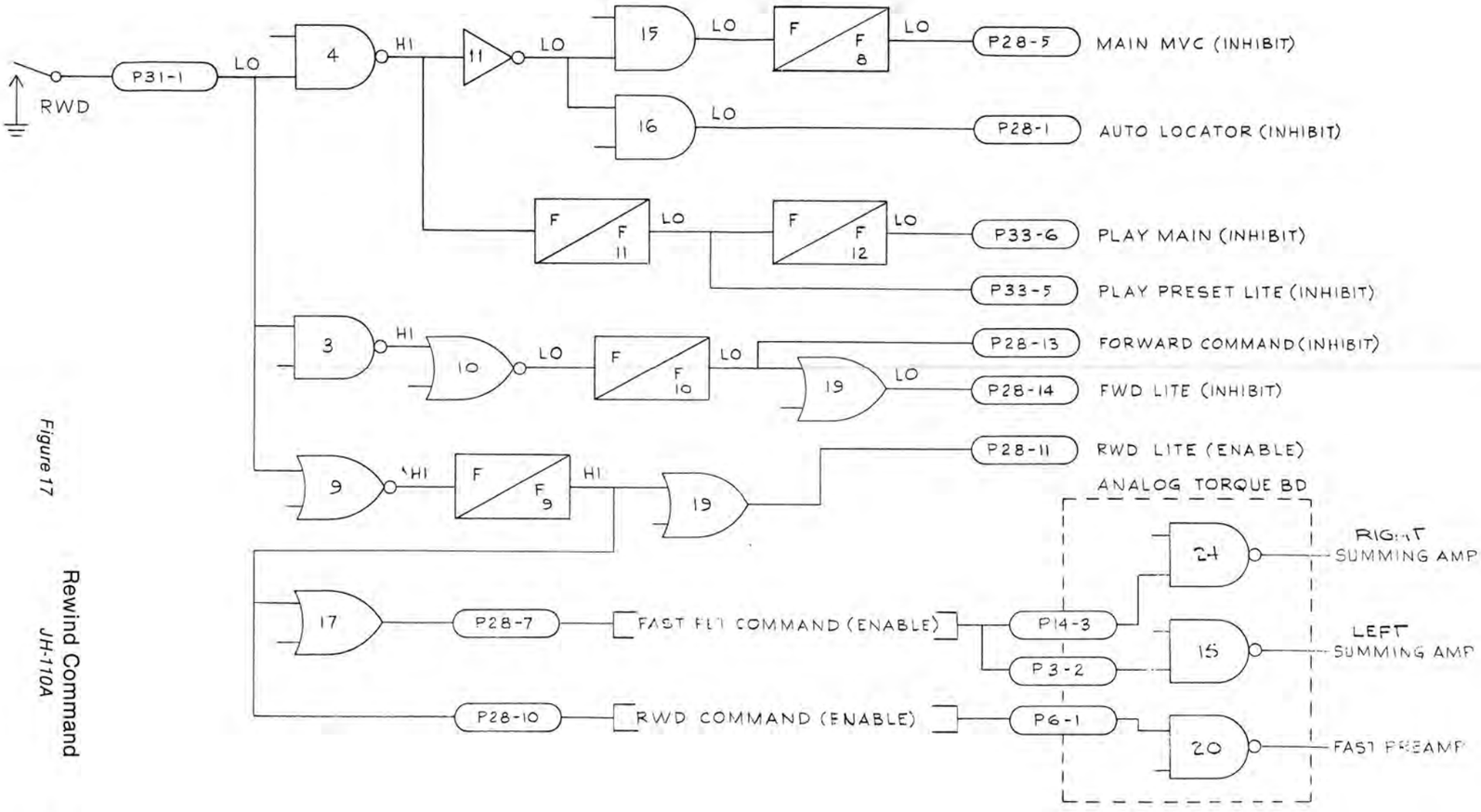

Figure 17

Rewind Command

JH-110A

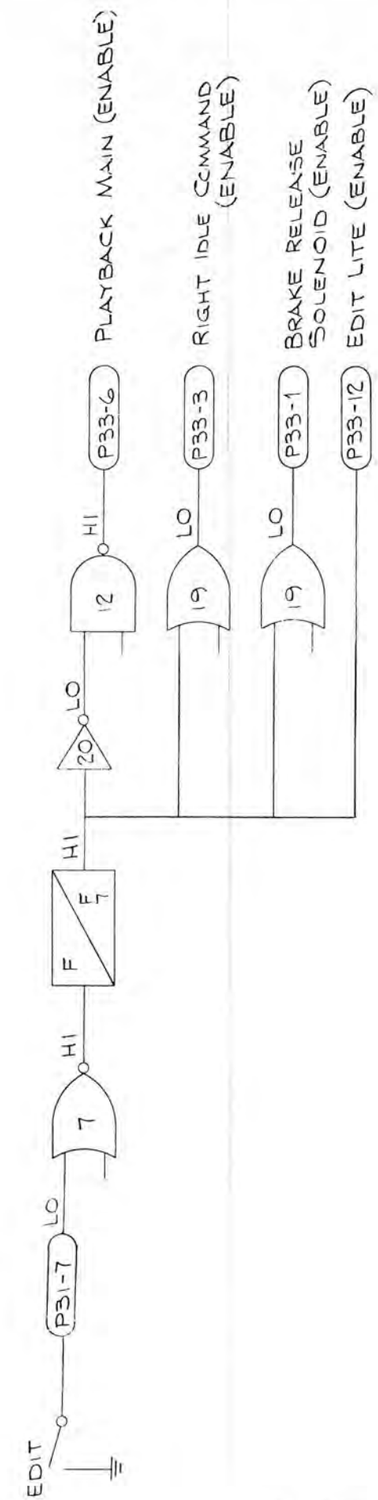

Edit Command

Figure 18

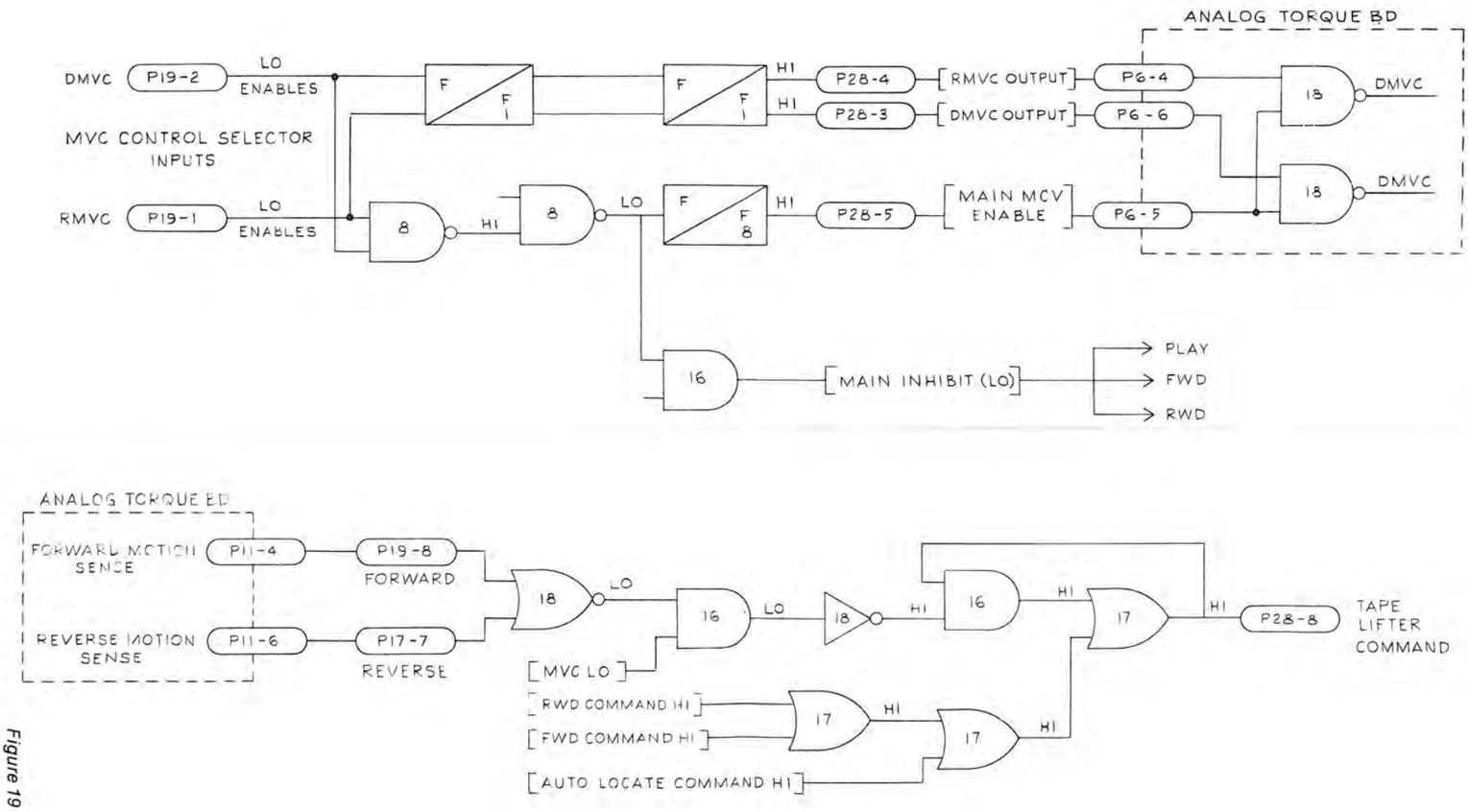

Figure 19

MVC Control Selector & Tape Lifter Commands

JH-110A

3.4 MOTOR CONTROL SYSTEMS

The two unique subsystems which control the speed of the capstan motor and control the tensions applied to the takeup and supply reels are responsible for many of the excellent specifications of the JH-110A Series of recording systems. These subsystems will be covered in detail in this section and in the troubleshooting section, since they contain sophisticated circuits which are EASY to repair PROVIDED you understand the FUNCTION of each circuit.

3.4.1 CAPSTAN SPEED CONTROL SYSTEM

(See Fig. 56, Page 10-13 for a schematic of the Capstan Tachometer. See Fig. 57, Page 10-15 for a schematic of the Phase Locked Loop bd.)

Please fold out Figure 24, page 3-27 and follow the functional block diagram while reading the following explanation of the system:

CAPSTAN SPEED is controlled by a Phase Locked Loop motor control system. The reference signal which ultimately controls the speed of the motor may be obtained from any one of these sources:

1. An internal crystal controlled osciallator.
2. An internal voltage controlled oscillator. This VCO may be controlled by:
   A. Its own SPEED CONTROL potentiometer.
   B. An externally applied DC control voltage.
3. An externally applied control frequency.

NOTE:
The power line VOLTAGE or FREQUENCY has NO EFFECT on any of the above speed reference signals.

The Internal Crystal Oscillator has a frequency of 96.0 kHz. This frequency is divided down to the control frequencies used in the Phase Locked Loop circuit by a series of digital divider chips. A divide-by-5 chip changes the oscillator frequency to 19.2 kHz before sending the signal to a series of divide-by-2 chips. Jumpers on the PC board select the correct frequencies for the HI, MED, and LO speed switches. The frequencies used as a speed reference are:

HIGH SPEED MODEL	LOW SPEED MODEL
30 IPS = 19.2 kHz	15 IPS = 9.6 kHz
15 IPS = 9.6 kHz	7½ IPS = 4.8 kHz
7½ IPS = 4.8 kHz	3¾ IPS = 2.4 kHz

An optical tachometer mounted directly on the capstan motor senses the speed of the capstan. This tach produces 500 pulses per revolution of the capstan motor. A doubler circuit increases this to 1000 pulses per motor revolution. Frequency is dependent on the speed of the motor.

The reference signal and the tachometer signal are EACH fed to a "one-shot" circuit *(a monostable multivibrator).*

Each time a "one-shot" is triggered, it puts out a CONSTANT VOLT-SECOND pulse. This means that—regardless of the shape or the duration of the input signal—the circuit puts out a string of pulses which have the EXACT frequency of the INPUT signal and that EACH pulse is EXACTLY ALIKE in both HEIGHT and WIDTH.

The reference signal and the tachometer signal have now been changed into TWO trains of "constant volt-second" pulses. These two pulse trains are fed to the PHASE COMPARATOR.

The output of the phase comparator is a single pulse train whose frequency is identical to that of the reference signal and whose pulse width is proportional to the DIFFERENCE IN TIMING between the two signals. *(The phase comparator output pulse is generated by making its leading edge coincide with the leading edge of the reference signal and its trailing edge coincide with the leading edge of the tach signal).*

Thus the output signal from the phase comparator is a LONGER pulse if the capstan *(and its tachometer)* are LAGGING BEHIND the reference signal. The output signal is a SHORTER pulse if the capstan is CATCHING UP with the reference signal.

This output pulse train is filtered to its AVERAGE VOLTAGE level. This filtered voltage is HIGHER when the capstan is LAGGING BEHIND the reference signal, and LOWER when the capstan is GAINING ON the reference signal. This filtered output voltage becomes the control voltage for the amplifiers which drive the capstan motor.

By applying a CONSTANT comparison between the reference signal and the speed of the capstan, and by applying IMMEDIATE corrective control, any speed changes are cancelled out. When the system is correctly adjusted, the PHASE VARIATION *(or jitter)* between the two signals will not be greater than 5 microseconds. *(This maximum variation is 10% of the SHORTEST REFERENCE PULSE.)*

NOTE:
The SPEED of the CAPSTAN is controlled DIRECTLY by the REFERENCE SIGNAL as long as a LOCK is achieved between the two signals. However there is an optimum system gain and an optimum phase relationship between the two signals which will maintain the LOCK with the greatest stiffness and stability.

The optimum adjustment is found when the positive pulse is approximately 30% of the total pulse duration.

Switching in the reference channel is accomplished by three TTL gate chips and a retriggerable one-shot. Control voltages for these circuits are switched by the SPEED CONTROL switch located on the tape transport.

The following simplified schematics show how the switching is accomplished:

NOTE

1. The NOR GATES used in these circuits have the following characteristics:
   a. If BOTH input lines are LO, the output is HI.
   b. If EITHER input line is HI, the output is LO.
   c. If ONE input is HELD LO, and the other input has a pulse train fed to it switching between HI and LO, the output will be an INVERTED version of the INPUT PULSE TRAIN.

2. IC 18 is a RETRIGGERABLE ONE-SHOT.
   When it is triggered, the outputs cross switch *(Q goes LO, $\overline{Q}$ goes to HI)* for a period of time set by an external RC circuit.

   If another signal pulse arrives at the input BEFORE the output "TIMES OUT," the timing circuit is "RETRIGGERED." The timing starts from the beginning again. This action can continue indefinitely—so long as a signal pulse arrives each time before the RC circuit "TIMES OUT."

When the REFERENCE switch is in the EXTERNAL position, an automatic circuit senses the presence—or absence—of an external signal. If a signal is present, it is used as the REFERENCE signal. If an external signal is NOT present, the internal VCO is automatically switched in as the REFERENCE source.

SIGNAL SWITCHING LOGIC

VARIABLE REFERENCE

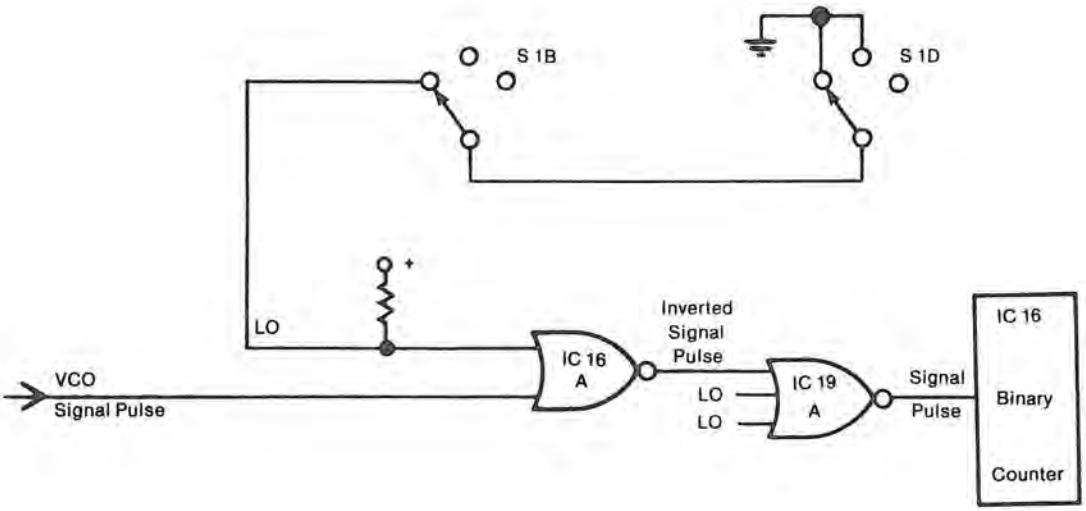

Figure 20

FIXED REFERENCE

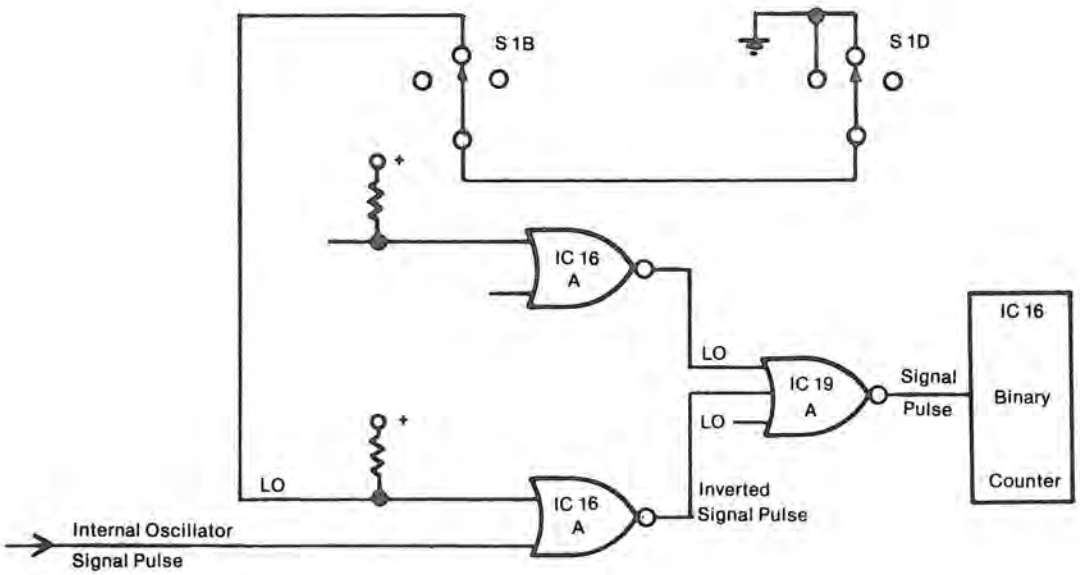

Figure 21

SIGNAL SWITCHING LOGIC

EXTERNAL REFERENCE *(When signal is present)*

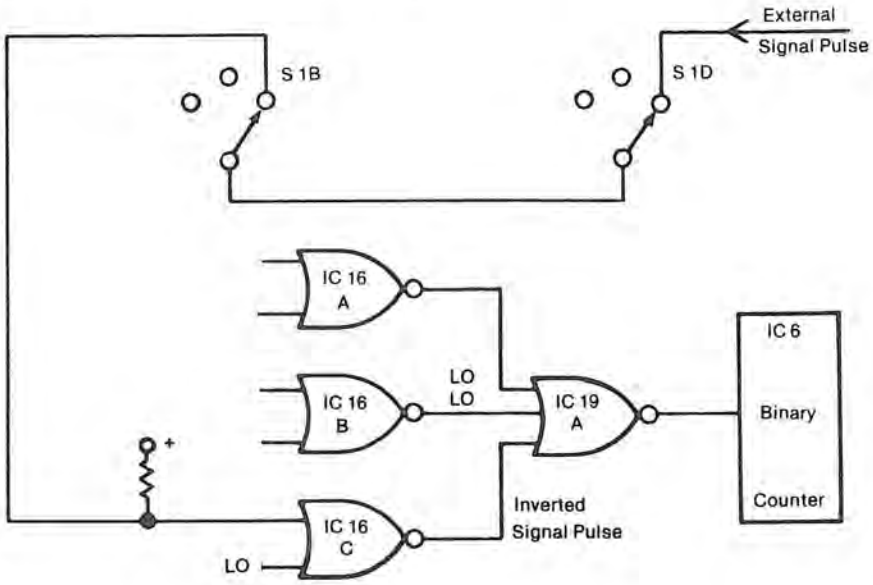

Figure 22

EXTERNAL REFERENCE *(When signal is NOT present)*

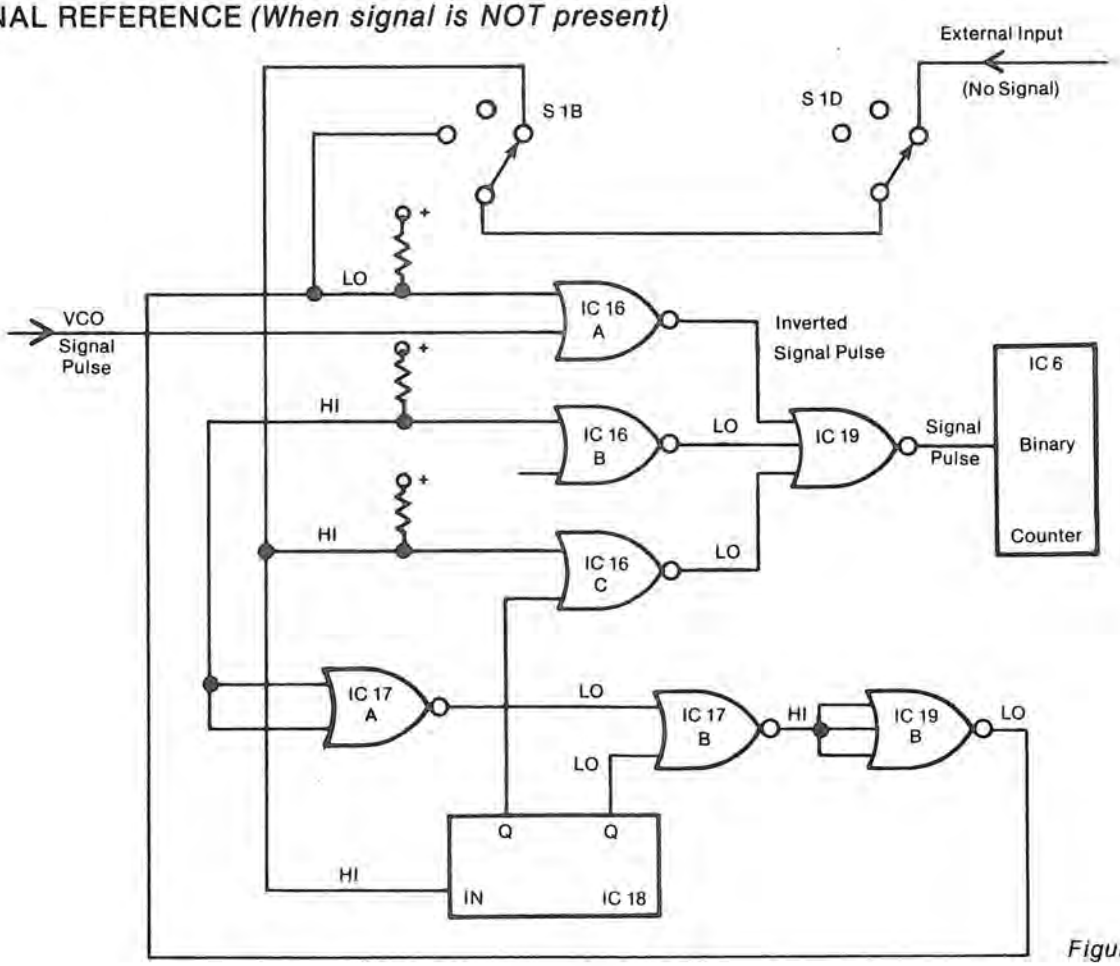

Figure 23

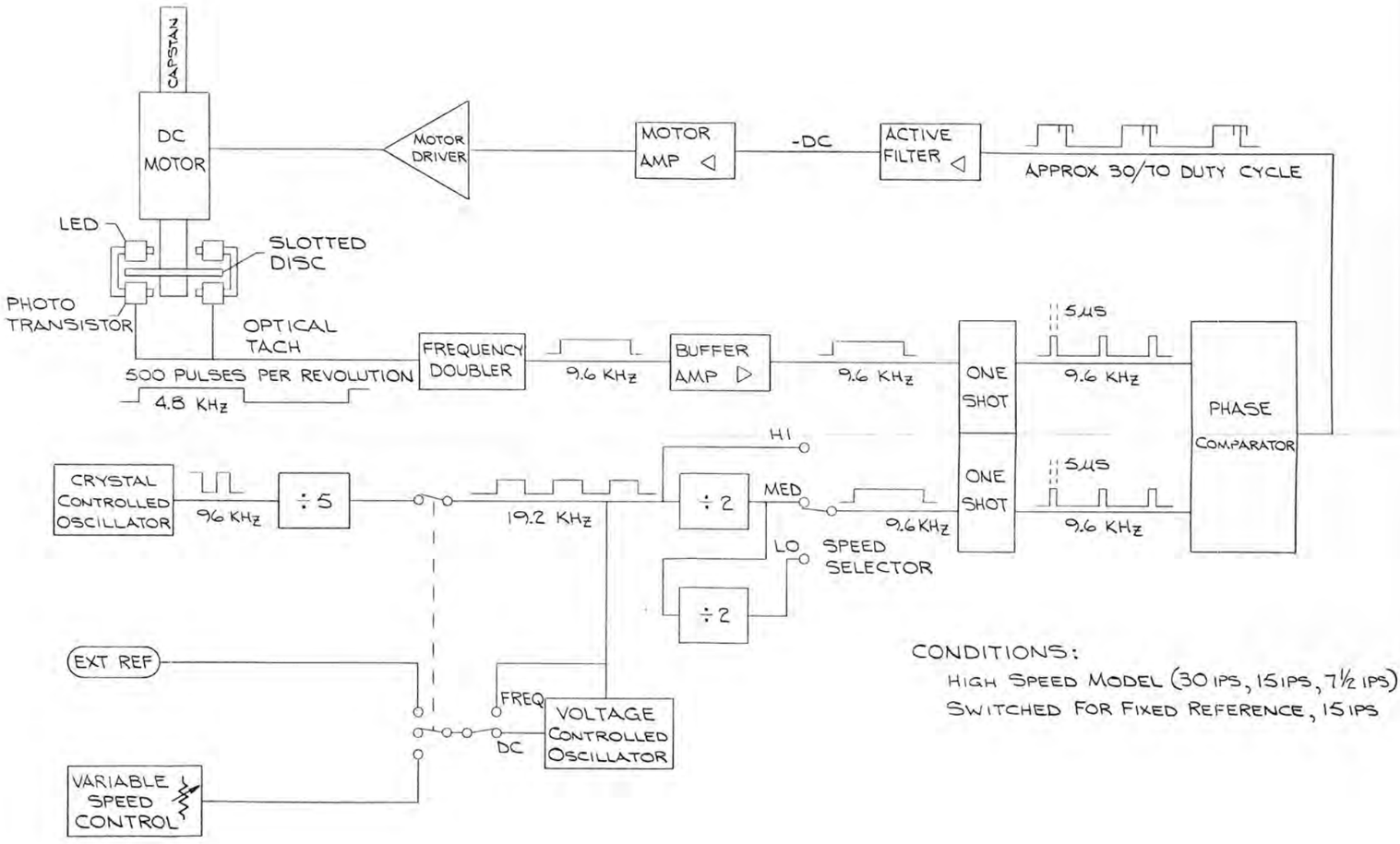

Figure 24 Capstan Speed Control System

3.4.2 TAPE TENSION SYSTEM

(See Fig. 58, page 10-17 for a schematic of the Analog Torque Bd.)

Please fold out Figure 25, page 3-31 and follow the block diagram while reading the following explanation of the system:

A correctly balanced tension on both the TAPE SUPPLY REEL and the TAKEUP REEL is computed and supplied by the circuits located on the ANALOG TORQUE board. Three signals are fed into this system:

A TACH GENERATOR attached directly to the shaft of EACH REEL motor senses the RPM of the reel. These tach generators deliver a DC signal voltage which is proportional to the SPEED of the reel.

A signal generated by the PHASE LOCKED LOOP system (which governs the capstan motor) supplies information on the TAPE VELOCITY.

A very simple formula shows the relationship between the TAPE VELOCITY, the REEL RPM, and the REELING RADIUS. *(Note that there is a large difference between the reeling radius of an empty spool and a full spool of tape.)*

$$2\pi(\text{reeling radius})(\text{reel RPM}) = (\text{tape velocity})$$

Algebraic manipulation gives us:

$$(\text{reeling radius}) = \frac{(\text{tape velocity})}{(\text{reel RPM})2\pi}$$

It is only a small logical step from this formula to the realization that:

FOR ANY GIVEN TAPE SPEED, the driving torque needed by any reel motor will be INVERSELY PROPORTIONAL to the REELING RADIUS.

$$(\text{torque required}) \propto \frac{(\text{reel RPM})2\pi}{(\text{tape velocity})}$$

This is a convenient relationship, since we can easily develop an analog signal proportional to each REEL SPEED, and another analog signal proportional to TAPE VELOCITY. Thus, we can divide the REEL SPEED by the TAPE VELOCITY and arrive at the correct TORQUE NEEDED for EACH reel motor.

After suitable conditioning, the signal from the CAPSTAN CONTROL circuit and the signal from ONE of the REEL MOTOR TACH GENERATORS are fed into a DIVIDER circuit *(A four-quadrant multiplier chip).*

This integrated circuit computes the tension needed for the reel motor.

The second reel motor has a circuit which is identical in function.

TWO PROBLEM AREAS ARISE:

1. The POLARITY of the signals created by the TACH GENERATORS is misleading. This happens because the TORQUE on the SUPPLY REEL must ALWAYS be in a CLOCKWISE direction, and the TORQUE on the TAKEUP REEL must ALWAYS be in a COUNTERCLOCKWISE direction. This is true regardless of whether the transport is in high speed play mode, low speed record mode, fast forward mode, or rewind mode.

Also, ONE of the reels will ALWAYS be turning in a direction OPPOSITE to its TORQUE. *(This applies ANY time that tape has been loaded on the machine.)*

2. A problem is created by the many modes of operation and the multiple speeds that the system must deliver. This problem has been solved by two sections of the circuit design:

   A. The TAPE TENSION COMPUTATION is made with an ACTIVE DIVISOR in the formula shown above. Thus the TORQUE is AUTOMATICALLY and CONTINUALLY adjust to the correct value to maintain constant TAPE TENSION for ANY of the speeds the system must deliver.

   B. A bank of FET switches is provided to insert the CONTROL LOGIC COMMANDS into the balanced tension system. These control signals upset the balance of tensions between the TWO HALVES of the system in the proper direction and in the proper ratio to maintain the correct tension under ALL MODES of operation.

   When accelerating from STOP mode to PLAY mode or to either of the FAST modes, a large increase of REEL MOTOR TORQUE is generated to give good acceleration into the new mode.

FAST ACCELERATION from one mode to another can create an additional problem:

A large reel full of tape has such a large mass that the maximum torque used in starting and accelerating must be made quite high.

This same maximum torque, if used on thin tape or used with small, light reels, may result in stretching the tape.

TORQUE LIMIT switches are provided to limit the MAXIMUM TORQUE which the REEL MOTORS CAN EXERT. *(These switches do not limit the torque curve below the limiting value.)*

The JH-110A *(maximum 10½ inch reels)* has a single LIMIT switch:

UP position is for NORMAL use.

DOWN position limits the torque for small reels, thin tape, and alignment tapes.

The JH-110A-14 *(maximum 14 inch reels)* has three LIMIT switches:

HI position is used for 14 inch reels.

MED position corresponds to the UP position in the 10½ inch machine. It is the NORMAL position to be used for standard tapes and 10½ inch reels.

LO position corresponds to the DOWN position in the 10 inch machine. It is used for all small reels, thin tapes, and alignment tapes.

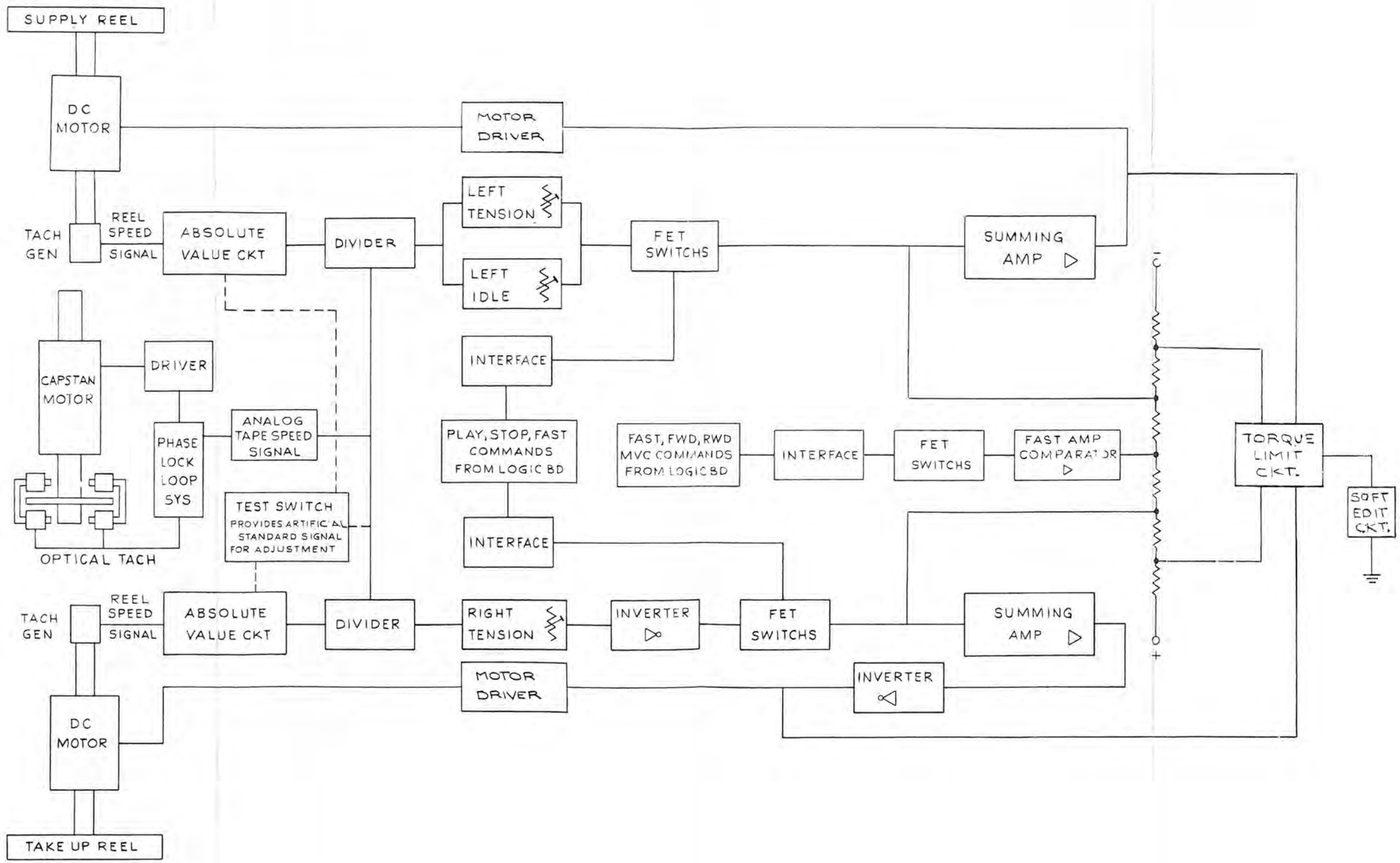

Tape Tension System

Figure 25 *JH-110A* *Page 3-31*

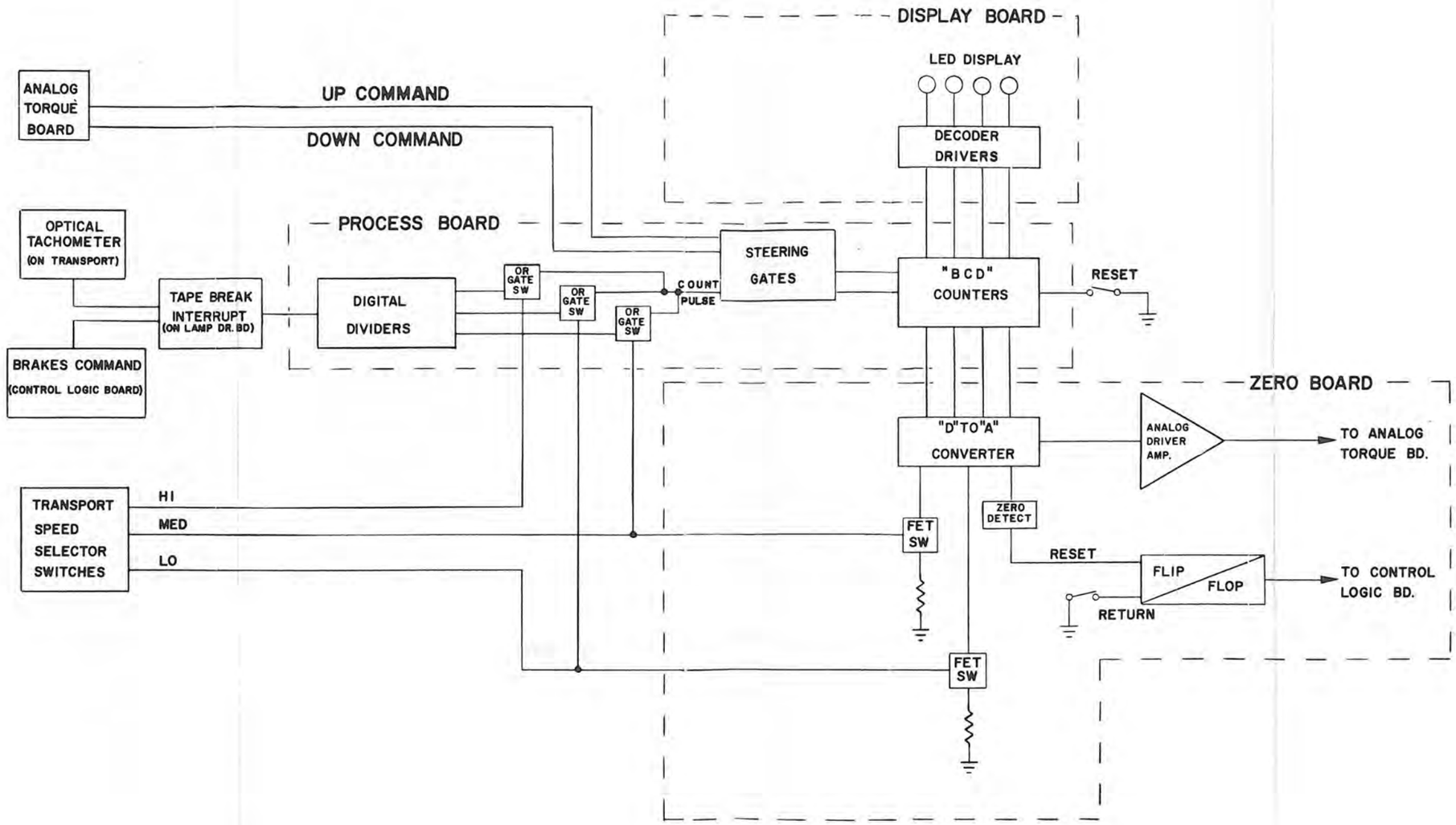

Return To Zero Locator Block Diagram

EXAMPLES

EXAMPLES

4.0 EXAMPLES OF USE

This section has been prepared as a quick course in operating the JH-110A professional tape recording system.

If the user has not operated professional tape recorders before, this is the fastest way to become familiar with each control. Even the experienced operator will need to know how to use some of the unique features of this machine.

By following each step of the ACTION column and verifying each item in the OBSERVE column, you should soon be able to adjust the controls for any desired mode of operation.

4.1 TRANSPORT MOTION CONTROLS

ACTION	OBSERVE
Turn the POWER SWITCH ON. *(Located inside the well at the bottom of the cabinet.)*	METER lights come ON. All transport function lights are OFF.
Insert an OPAQUE CARD into the TAPE SENSOR slot.	The yellow light comes ON under the STOP button. The TAKEUP REEL starts turning counterclockwise. The SUPPLY REEL starts turning clockwise. The speed of rotation for both reels is approximately 20 RPM—or about 1 turn in 3 seconds. The speed does not need to be identical for the two reels.
Remove the card. Load a roll of tape. *(Thread the machine as shown in Fig.4, page 2-2.)*	STOP light is ON. Reels wind up loose tape and establish IDLE TENSION.
Press the FWD button	STOP light goes OFF. FWD light comes ON. TAPE LIFTERS lift tape away from the heads. The tape accelerates to a fast movement in the FWD direction.
Press the RWD button.	FWD light goes OFF. RWD light comes ON. Tape slows smoothly and reverses direction—then accelerates in a REWIND direction.
Press the STOP button.	RWD light goes OFF. STOP light comes ON. Tape comes to a smooth stop. Tape lifters go to their recessed position.
SLOWLY move the MVC *(Manual Velocity Control)* JOYSTICK to the right.	LED located in the joystick comes ON. Tape moves forward. *(Speed of movement is directly related to the angle of the joystick.)*

NOTE: The JOYSTICK will not work unless good hand contact is made to the surface of the tape transport. Contact may be made with either hand.

SLOWLY move the MVC JOYSTICK to the left.	Tape comes to a stop and then moves in the reverse direction. Speed of the movement is directly related to the angle of the joystick.
Release the MVC JOYSTICK.	MVC LED turns OFF. Tape STOPS.

TOUCH *(do NOT move)* the MVC JOYSTICK.	Tape starts in the same direction and at the same speed which was set when the JOYSTICK was last used.
Set the MVC JOYSTICK to some intermediate forward speed—then release it.	MVC LED turns OFF. Tape STOPS.
Press the FWD button.	STOP light goes OFF. FWD light comes ON. TAPE LIFTERS come forward. Tape accelerates to FULL SPEED forward.
TOUCH *(do NOT move)* the MVC JOYSTICK.	MVC LED comes ON. Tape slows to the INTERMEDIATE SPEED already established by the position of the MVC JOYSTICK.
Release the MVC JOYSTICK.	NOTHING CHANGES. Tape continues to move. MVC LED stays ON.

NOTE: This is known as LATCHING MVC MODE.

Press ANY transport control button.	Machine drops out of LATCHED MVC MODE and enters the mode selected. MVC LED goes OFF.
Press the STOP button.	STOP light comes ON. Tape STOPS.
Press the PLAY button.	STOP light goes OFF. PLAY light comes ON. Capstan pressure roller clamps tape to the CAPSTAN. Tape moves at selected PLAY speed.
Press the RWD button.	PLAY light goes OFF. RWD light comes ON. CAPSTAN PRESSURE ROLLER releases tape. Tape lifters lift tape away from heads. Tape accelerates in the REWIND direction.
Press the PLAY button.	RWD light goes OFF. Both STOP and PLAY lights come ON. Tape stops. STOP light goes OFF. Tape lifter goes to its recessed position. Capstan pressure roller clamps tape to the capstan. Tape smoothly accelerates to selected PLAY speed.

CAUTION: The following step will result in erasure of any material which has been recorded on the tape.

Press the RECORD button.	RECORD light comes ON. *(PLAY light is still ON.)*

NOTE: *Transport is in RECORD mode. However, ONLY channels which have been put into RECORD-READY will make a recording.*

Press the RWD button.	RECORD light and PLAY light go OFF. RWD light comes ON. CAPSTAN PRESSURE ROLLER releases tape. TAPE STOPS. Tape lifters lift tape away from heads. Tape accelerates in REWIND mode.
Allow tape to rewind completely.	As soon as the tape pulls away from the takeup reel, it comes out of the tape sensor slot. ALL transport lights go OFF. Mechanical brakes come ON.

Thread the tape across the heads, thru the capstan assembly, but NOT THRU the tape sensor slot.	
Allow the end of the tape to spill over the right side of the tape transport.	
Press the EDIT button.	EDIT light comes ON. Capstan pressure roller pulls tape against the capstan. Tape spills over the right side of the tape transport. The TAKEUP REEL is not activated. *(This reel may creep slowly.)*
Press the STOP button.	EDIT light goes OFF. Capstan pressure roller releases tape. Tape stops moving.
Rethread the tape through the tape sensor slot and around the takeup reel.	STOP light comes ON. Reels turn at IDLE speed and take up any slack tape.
Press the PLAY button.	STOP light goes OFF. PLAY light comes ON. Capstan pressure roller clamps tape to capstan. Tape moves at PLAY speed selected.
Push the MANUAL TAPE LIFTER lever to the left.	TAPE LIFTERS lift the tape away from the heads.
Release the MANUAL TAPE LIFTER lever.	The TAPE LIFTERS fall back into their recessed position.
Push the shield lever toward the heads.	The HEAD SHIELD comes UP.

NOTE: *Head Shield SHOULD be UP for BOTH PLAY and RECORD modes. If desired, the HEAD SHIELD may be left in the UP position at all times except when tape is being threaded.*

4.2 REFERENCE AND SPEED CONTROLS

Load a roll of tape. Turn the REFERENCE switch to VAR. Turn the SPEED switch to HI. Press the LO TORQUE LIMIT switch *(14" model)*. Press the TORQUE LIMIT switch *(10" model)*.	
Put the transport into PLAY mode. Slowly rotate the VAR potentiometer.	Note the speed variation between minimum and maximum position of the potentiometer. The speed range will be from −20% to +20% of the HIGH SPEED mode of your machine.
Turn the SPEED switch to MED.	The transport goes into STOP mode.
Put the transport into PLAY mode. Slowly rotate the VAR potentiometer.	The speed variation will be ±20% of the MED speed of your machine.
Repeat the above procedure for LO speed.	The speed variation will be ±20% of the LO speed of your machine.

Turn the REFERENCE switch to FIX.	The speed will be the lowest fixed speed provided for your machine. *(7½ ips for the standard machine, 3¾ ips for the low speed option.)*
Turn the VAR potentiometer.	There is NO CHANGE of speed. Note that this potentiometer affects speed ONLY when the machine i s in VARIABLE REFERENCE position.
Repeat the above procedure for MED and for HI SPEEDS.	Speeds will be 15 ips and 30 ips for the standard machine. Speeds will be 7½ ips and 15 ips for the slow speed machine. Note that the machine automatically switches to STOP mode when the SPEED SELECTOR switch is turned.
Turn the SPEED control to HI. Press the LO TORQUE LIMIT switch *(14" model)*. Press the TORQUE LIMIT switch *(10" model)*.	
Hold a finger against the back of the tape between the right roller guide and and the takeup reel.	
Put the transport into FWD mode—then into RWD mode. Continue to rock back and forth between the two mode.	FEEL the amount of tape tension developed during acceleration of the tape in a new mode.
Press the HI TORQUE LIMIT switch *(14" model)*. Put the TORQUE LIMIT switch into its UP position *(10" model)*.	FEEL the greater amount of tape tension developed during acceleration of the tape in a new mode. Also note that the speed change is quicker.

NOTE: 1. *The 10 inch transport has a single TORQUE LIMIT switch. In UP position (for normal tape and 10 in. reels) the max torque is 49.5 inch ounces. In DOWN position (for plastic reels and alignment tapes only) the max torque is 22.5 inch ounces.*

2. *The 14 inch transport has 3 TORQUE LIMIT switches. The HI switch is for use with 14 inch reels ONLY and has a max torque of 72 inch ounces. The MED switch is for use with normal tape and 10 inch reels and has a max torque of 49.5 inch ounces. The LO switch is for use with plastic reels and alignment tapes and has a max torque of 22.5 inch ounces.*

The EXTERNAL position of the REFERENCE switch is provided for synchronizing this machine with some other piece of equipment. The SERVO plug on the back of the transport chassis provides connections to this circuit. There are two methods of controlling the speed of the machine through this channel:

1. A signal of ±5v DC will vary the frequency of the internal VCO. When switched to EXTERNAL REFERENCE, this signal voltage can control the speed of the machine.

2. A 19.2 kHz signal can be applied to the EXTERNAL REFERENCE. The FREQUENCY of the external signal then controls the speed of the machine.

The MCI AutoLock is a separate unit which synchronizes a slave machine to a master machine using the SMPTE, EBU or NTSC (drop frame) digital time code for exact synchronizing of slave

to master tape machine. The slave machine reference switch is set to "EXT" position or if available to "SLAVE" position. The master machine reference switch is turned to "FIX". Synchronization is achieved by the capstan servoing of the slave machine to the master until exact lock is achieved by comparing synchronizing detect pulse of the slave to the master machine. The master machine speed is set by fixed 19.2 kHz (and by LO, MED, or HI speed switch) and controls the slave machine speed which receives speed information from an external master source.

4.3 ELECTRONIC CONTROLS

NOTE:
Each track has its own electronics panel (a 2 track machine has 2 electronic panels, a 4 track machine has 4 electronic panels, etc.). The controls for each track are identical.

For the following examples it will be necessary to provide a signal input (an audio generator is preferred), and an output monitoring system.

PREPARATION:
Load a roll of degaussed tape. Put the two small toggle switches on the electronics panel(s) into CAL position (down). Put the BIAS switch into its OUT position (NOT reading BIAS). Press the INPUT switch. Press the READY switch.

Put a 500 Hz signal into the channel(s) under test. If necessary adjust the INPUT SIGNAL level until the meter reads 0 VU.

Put the tape transport into RECORD mode (as demonstrated in Section 4.1). Record several minutes of 500 Hz tone.

REWIND the tape. Change the INPUT SIGNAL to 700 Hz. If necessary adjust the INPUT SIGNAL level until the meter reads 0 VU.

NOTE: We now have 500 Hz recorded on the tape, and 700 Hz applied to the INPUT. We can easily tell—by sound—whether we are playing back the previously recorded 500 Hz or the 700 Hz from the INPUT.

Press the SAFE switch(es) on the electronics panel(s).

Put the transport into STOP mode.

Press the REPRO switch(es).	There is NO OUTPUT on the METER or on the LINE OUTPUT. *(The REPRODUCE HEAD has NO output when the transport is in STOP mode.)*
Press the INPUT switch(es).	The OUTPUT shown on the METER and heard on LINE OUTPUT is 700 Hz *(the INPUT signal).*
Press the CUE switch(es).	There is NO output on the METER or on the LINE OUTPUT. *(Cue mode monitors the RECORD head which has NO output when the transport is in STOP mode.)*

Put the transport into PLAY mode.

Press the REPRO switch.	The OUTPUT shown on the METER and heard on the LINE OUTPUT is 500 Hz. *(The previously recorded signal.)*

Press the INPUT switch(es).	The OUTPUT shown on the METER and heard on the LINE OUTPUT is 700 Hz. *(The INPUT signal.)*
Press the CUE switch(es).	The OUTPUT shown on the METER and heard on the LINE OUTPUT is 500 Hz. *(The RECORD head is monitoring the previousy recorded signal.)*
Press the READY switch(es) on the electronics panel(s).	The AMBER LED(s) turn ON.
Put the transport into RECORD mode. *(The RED LED(s) turn ON.)*	
Press the REPRO switch(es).	The OUTPUT shown on the METER and heard on the LINE OUTPUT is 700 Hz. *(The REPRODUCE head is monitoring the signal immediately after it is recorded.)*
Press the INPUT switch(es).	The OUTPUT shown on the METER and heard on the LINE OUTPUT is 700 Hz. *(The INPUT signal BEFORE it is recorded.)*
Press the CUE switch(es).	The OUTPUT shown on the METER and heard on the LINE OUTPUT is 700 Hz. *CUE mode switches automatically in the following way:* *In PLAY mode it monitors the RECORD head.* *In RECORD mode it monitors the LINE INPUT.*
Change the RECORD CAL toggle switch(es) to their UP position. Press the REPRO switch(es).	
Slowly vary the setting(s) of the RECORD potentiometer(s).	The LEVEL shown on the METER and heard on the LINE OUTPUT varies in step with the RECORD potentiometer.
Set the RECORD potentiometer(s) so that the METER(s) read −7dB.	The LINE output has a reduced level.
Press the BIAS button(s). *(DOWN position)*	The METER reads the BIAS LEVEL *(approximately 0 VU).* 700 Hz tone is still heard on the LINE OUTPUT.
Press the BIAS button(s) a second time, *(UP position).*	METER reading returns to −7dB *(700 Hz RECORD level).*
Return the RECORD CAL toggle switch(es) to their CAL *(down)* position.	METER reading returns to 0 VU. 700 Hz tone from the LINE OUTPUT returns to full output level.
Change the REPRODUCE CAL toggle switch(es) to their UP position. Slowly vary the setting(s) of the REPRODUCE potentiometer(s).	The LEVEL shown on the METER and heard on the LINE OUTPUT varies in step with the REPRODUCE potentiometer. *(The 700 Hz tone is being recorded at standard level—the REPRODUCE GAIN is being varied.)*

Leave the REPRODUCE potentiometer so that the METER(s) read –5dB.	
Return the REPRODUCE CAL toggle switch(es) to their CALIBRATE *(down)* position.	The output level shown by the METER and by the LINE OUTPUT has returned to standard *(0 VU).*
Vary the setting of the REPRODUCE potentiometer(s) and the RECORD potentiometer(s).	Output level does NOT change. REPRODUCE CAL switch and RECORD CAL switch remove the potentiometers from the circuits.
Unlatch the electronics panel(s) and pull out so that the plug-in cards are visible.	
Press the RED button(s) at the front of the REPRODUCE CARD(s) *(DOWN position).*	The GREEN "CCIR" LED(s) light above the REPRODUCE potentiometer(s). *(Equalization circuits on the REPRODUCE CARDS have been switched to CCIR standards).*
Press the RED button(s) a second time *(UP position).*	The GREEN "CCIR" LED(s) to OFF. *(Equalization circuits on the REPRODUCE CARDS have now been switched to NAB standards.)*
Press the RED button(s) at the front of the RECORD CARD(s) *(down position).*	The GREEN "CCIR" LED(s) light above the RECORD potentiometer(s). *(Equalization circuits on the RECORD CARDS have been switched to CCIR standards.)*
Press the RED button(s) a second time. *(UP position)*	The GREEN "CCIR" LED(s) go OFF. *(Equalization circuits on the RECORD CARDS have now been switched to NAB standards.)*

4.4 RETURN-TO-ZERO LOCATOR OPTION

This device has only two controls, a RESET button and a RETURN button:

1. The ZERO POINT is established for the system by pressing the RESET button WHEN the tape is AT the position you wish it to RETURN TO. The RESET button returns the DISPLAY to 00.00.
2. Pressing the RETURN button commands the device to REWIND the machine to the tape position which reads 00.00. This option searches for ZERO POINT ONLY in a REWIND direction.

ACTION	OBSERVE
Load a roll of tape.	The display is usually at some point ABOVE ZERO by the time the threading procedure is complete.
SET the ZERO POINT.	The DISPLAY now reads 00.00.
Put the transport into PLAY mode, HI SPEED.	TIME the count. The DISPLAY is in minutes and seconds.

Change the transport to PLAY mode, LO SPEED.	The counter RESETS automatically. The tape is now traveling at ¼th the speed it was above. The DISPLAY is still in minutes and seconds as it was above. The COUNT has been automatically adjusted with the change in speed.

NOTE: The display is always in "real time" unless a variable speed reference is used.

Put the transport into RWD mode.	The DISPLAY counts DOWN, keeping track of its position relative to the ZERO POINT. Note that the speed of the count keeps pace with the REWIND SPEED. The count remaining on the DISPLAY at any point is: The playing time on the tape between the established ZERO and the present tape position.
Put the transport into STOP mode.	
Press the RESET button.	The DISPLAY resets to ZERO. We have established a new ZERO POINT.
Put the transport into ANY forward mode and allow it to run for several minutes.	The DISPLAY counts at the speed appropriate to the mode of operation. The count is ALWAYS in MINUTES OF PLAYING TIME AFTER ZERO POINT.
Press the RETURN button.	The machine automatically shifts into high speed REWIND until it gets close to ZERO. The machine then slows down and comes to a smooth STOP at ZERO POINT.
Put the transport into FWD mode and allow several minutes to build up on the DISPLAY.	
Press the RETURN button. Press the PLAY button.	The transport returns to ZERO POINT, comes to a full STOP, and then goes into PLAY mode.
Put the transport into RWD mode until it goes BELOW 00.00 on the DISPLAY.	After the DISPLAY reaches 00.00, it switches to 99.59 and counts down again.
Press the RETURN button.	The transport goes into RWD mode and continues until the tape is completely REWOUND and the tape UNTHREADED.

NOTE: This system will locate zero point in a rewind direction only.

MAINTENANCE

MAINTENANCE

5.0 MAINTENANCE

While MCI equipment has built an enviable reputation for trouble-free operation when it has proper maintenance, some components will vary with age, with use, with temperature variations, or with other environmental factors. We recommend that you verify the performance of this equipment at frequent intervals. Minor adjustments may be made by any operator who will follow instructions carefully and exactly. However, if any major discrepancy is found between the specifications for the equipment and the performance, **refer the problem to an MCI dealer.** He is your best source of qualified help, since he has the full resources of MCI behind him if he should find a problem not easily solved in the field.

The recommended procedures for periodic check-outs are included in this section of the manual. How often these verification checks should be made depends on the number of hours of use, the specific job being done by the machine, etc. However, we recommend that if the recording system is in daily use, an alignment verification should be run at least once a week to ensure peak performance at all times.

EQUIPMENT NEEDED

The instruments used by MCI to test and adjust these recording systems are listed below. To keep this system adjusted to the peak of its performance capabilities, your check-out equipment should be of similar quality.

AC Voltmeter capable of reading at bias frequencies of 120 kHz
Hewlett-Packard Model 400 FL

DC Voltmeter, electronic type, 0.3 volt, full scale
Triplett Model 603

Audio Signal Generator
Krohn-Hite Model 5800

Frequency Counter
Hewlett-Packard Model 5381A

Flutter Meter
EMT Model 424

Intermodulation Analyzer
Crown Model IMA

Wave Analyzer
Hewlett-Packard 3581A

Phase Meter
MCI Model JH-22

Spring scales
Ametex 0-36 ounces (1.02 kgm) and 0-10 pounds (4.54 kgm).

Oscilloscope
Phillips Model 3232 (2 mv/cm vertical sensitivity, 10 mHz bandwidth, 0.2 microseconds/cm horizontal sweep).

NOTE: Never use any type of SHIELDED leads for scope or meter when working with the 120 kHz Bias Oscillator. DETUNING and/or WRONG READINGS WILL ALWAYS OCCUR. Use ONLY open leads not more than 3 ft. long.

The following service aids are available from MCI Customer Service department:

ALIGNMENT KIT (surface blocks and height gauges)		MCI number AS6B79
EXTENDER BOARDS	Reproduce board	MCI number 27B51
	Record board	MCI number 27B52
	Bias board	MCI number 27B53
LOGIC ANNUNCIATOR BOARD		MCI number 27B177

5.1 TAPE PATH MECHANICAL ADJUSTMENTS

CAUTION:
There are many SENSITIVE and CRITICAL adjustments in this procedure. MCI recommends that ONLY experienced, factory trained technicians, USING THE PROPER TOOLS, be allowed to make ANY adjustments to the TAPE PATH.

Operation of the whole recording system may be adversely affected by ANY misalignment of the TAPE PATH.

WARNING:
Improperly slit tape sometimes makes it seem that the tape path adjustments are "out." Be very sure that your tape is good before trying to "adjust out" a problem which will change with the next roll of tape.

5.1.1 HEIGHT AND ZENITH TESTS

TEST:
Load a roll of tape. A metal spool is preferable. Be sure that the spool is not deformed. Select the most commonly used type of reel.

1. Use the MVC Joystick to shuttle the tape in BOTH directions. Watch the tape buildup in each reel.

   The tape should not rub against either reel flange. The spool of tape should be approximately centered between the two flanges of BOTH the SUPPLY reel and the TAKEUP reel.

2. Put the machine into FWD mode—then into RWD mode. Observe the tape path across the HEADS and across the FIXED GUIDES.

   There should be no up-and-down movement of the tape across the heads. Watch for "crinkling" of tape edges at the fixed guides.

   The edge of the tape should "split" the top and the bottom track shields. The UNDERCUTTING on the record and the reproduce heads center on these track shields.

3. Put the machine into PLAY mode.

   The tape path should not change from the path observed in step 2.

IF ADJUSTMENTS ARE NECESSARY:
The following adjustments should be made by an EXPERIENCED, FACTORY TRAINED technician ONLY.

MCI can supply, through Customer Service, a set of alignment tools to be used with the JH-110A, JH-114 and JH-100 recorders (MCI part no. AS6B79). These tools include surface blocks for use in tape path zenith alignment, and gauge blocks for use in measuring tape hight above the deck plate.

5.1.2 TURNTABLE HIGHT ADJUSTMENT

The hight of turntables is adjusted by adding or subtracting shims located between the turntable and the motor hub. During factory checkout, several die-cut plastic shims are installed under the turntables.

The following die-cut shims are available from Customer Service:

Part Number	Color	Thickness
26B22-1	BLUE	.005 in. (.127 mm)
26B22-2	BROWN	.010 in. (.254 mm)
26B22-3	YELLOW	.020 in. (.508 mm)

Remove the reel lock from the turntable. Remove the three screws located near the center of the turntable. Lift the turntable away from the motor hub. Add or remove shims as needed. Reassemble the turntable and repeat the test on page 5-2.

5.1.3 TAPE PATH HEIGHT

The tape height is .625 in. (15.863 mm) above the DECK PLATE at all points. This height MUST be measured with the OVERLAY plate removed. A .625 inch height gauge is included in the alignment tool assembly.

The fixed tape guides at the entrance and exit of the head block assembly are machined to close tolerances. These guides are normally taken as the "standard" for adjusting tape path heights.

5.1.4 HEAD HEIGHT ADJUSTMENT

Each individual head in the head block assembly has a height adjustment screw. *(See Fig. 81, page 10-41 for a Pictorial of this assembly. See Fig. 28, page 5-4 for a guide to the adjustments.)*

With tape loaded, put the transport into PLAY mode.

Adjust the head height until the VISIBLE part of the TOP track shield is the SAME WIDTH as the VISIBLE part of the BOTTOM track shield. Turning the HEIGHT SCREW clockwise will LIFT the head.

5.1.5 HEAD ASSEMBLY ZENITH ADJUSTMENT

See Fig. 27, page 5-4 and Fig. 28, page 5-4 for guides to this adjustment. See Fig. 81, page 10-41 for a Pictorial of the HEAD assembly.

The basic principle of tape path alignment is that all surfaces which touch the tape must be parallel. Very little tolerance can be allowed. For ½" and 1" head assemblies the use of surface blocks of the quality described earlier in this section (MCI part no. AS6B79) is suggested in this alignment procedure.

In the drawing below, note that the tape forms a series of FLAT PLANES between successive CONTACT LINES as it travels from the supply reel to the takeup reel. These PLANES must be made AS FLAT AS POSSIBLE.

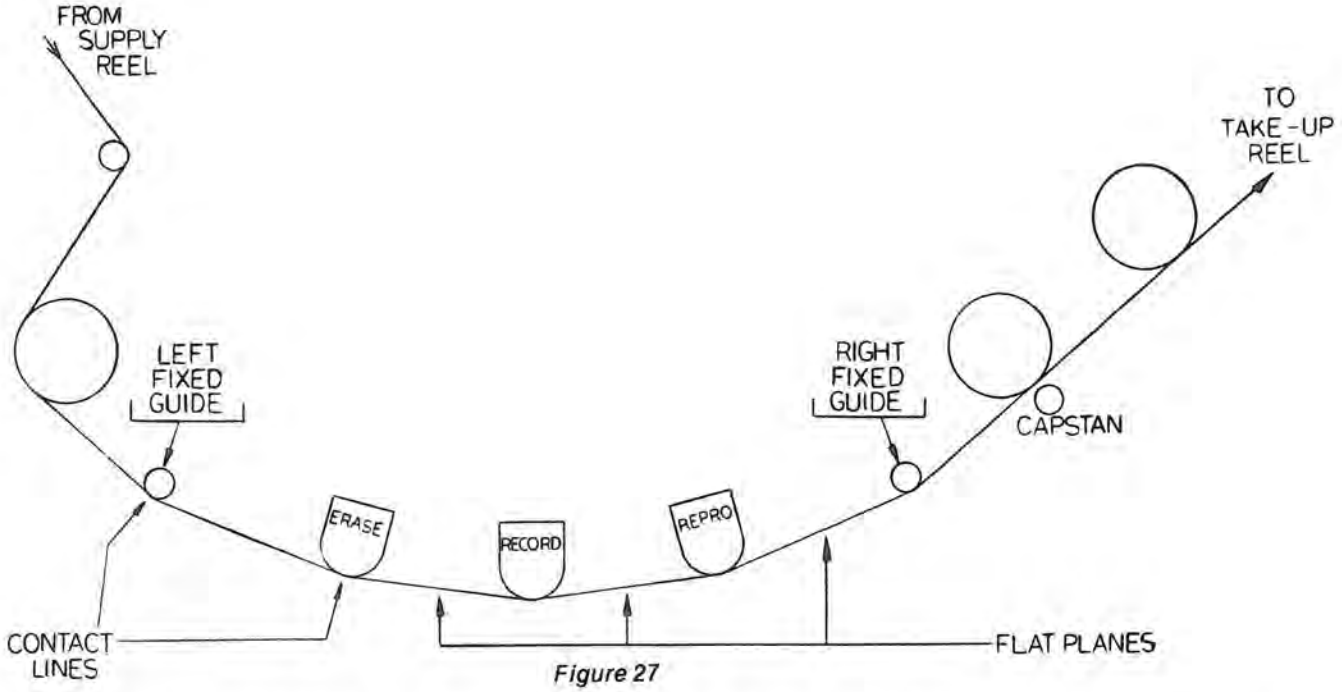

Figure 27

Remove the head assembly by loosening the Allen Cap screw which goes through the center of each of the fixed tape guides.

Since some surface must be chosen as a standard in these adjustments, we have chosen to use the FIXED TAPE GUIDES. These guides are machined to close tolerance and are carefully aligned during factory checkout. They should not need to be realigned in the field unless the head assembly has been badly abused.

The machined surface blocks described earlier in this section are used as flatness standards for ½" and 1" head assemblies. With ¼" head assemblies, use narrow side of surface block as reference (note this is less exact due to mechanical dimensions of block).

CAUTION
Be extremely gentle in any contact with the head assemblies. Do not scrape or bump the surface block against the heads.

Place one end of the surface block FIRMLY against the RIGHT FIXED TAPE GUIDE, and the other end against the REPRODUCE HEAD.

Hold the assembly up to a light and look for light between the surface block and the REPRODUCE HEAD. If a GAP shows at either the TOP or BOTTOM of the reproduce head, THE TWO CONTACT LINES ARE NOT PARALLEL.

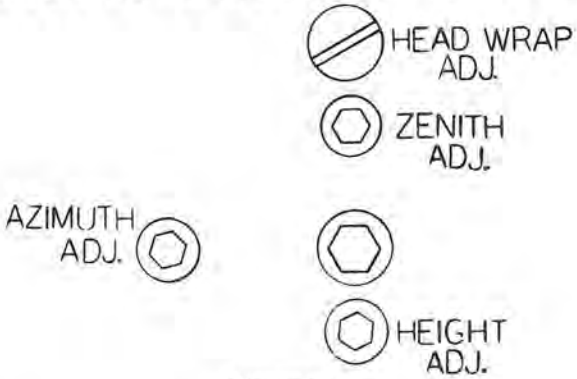

Figure 28

Adjust the 6-32 flat head Allen screw, labeled ZENITH ADJUST, until the REPRODUCE HEAD is parallel to the FIXED TAPE GUIDE.

Turning this screw CLOCKWISE pulls the BOTTOM of the HEAD INWARD. Turning the screw COUNTER-CLOCKWISE pushes the BOTTOM of the HEAD toward the FRONT of the machine.

When the reproduce head has been adjusted PARALLEL to the fixed tape guide, use the reproduce head as a standard and adjust the RECORD HEAD. Hold the surface block firmly against the standard and look for light between the surface block and the component being checked.

When the record head has been adjusted, use it as a standard and align the ERASE HEAD.

When the ERASE HEAD has been adjusted, use the LEFT FIXED TAPE GUIDE as a standard and check the ERASE HEAD. If this test does not agree with the previous adjustment, REPEAT ALL ZENITH ALIGNMENT PROCEDURES. The left fixed tape guide will be parallel to the right fixed tape guide unless the head assembly has been badly abused.

NOTE:
Woelke heads have shields which make use of the alignment blocks unpractical. As an alternate method, you may visually align the repro and record head to guide.

5.2 CAPSTAN PINCH ROLLER TEST AND ADJUSTMENT

TEST
Loop a cord around the bottom of the pinch roller shaft. Attach a spring scale which has a 0 to 10 pound (0 to 4.54 kgm) capacity. Place an opaque card in the tape break sensor slot. Put the transport into PLAY mode.

Be sure that the pinch roller solenoid is energized. Press a finger lightly against the surface of the pinch roller. Pull the spring scale slowly toward the rear of the deck until you feel the pinch roller begin to slip. Read the scale.

The tension reading should be between 5 and 6 pounds (2.5 kgm).

If adjustments are necessary:
(See the Pinch Roller Assembly drawing Figure 82, page 10-43.)

Locate the 4 inch (100 mm) spring loaded pull rod between the pinch roller solenoid and the pinch roller arm assembly.

Adjust the pinch roller tension by turning the lock nut at the end of the SOLENOID PULL ROD. Only a fractional turn adjustment will be needed.

5.3 TAPE LIFTER TEST AND ADJUSTMENTS

TEST
1. Load a roll of tape. Put the transport into FWD or RWD mode. Observe the TAPE CLEARANCE at the heads.

   Tape should clear the record head and the reproduce head by .050 in. (1.25 mm) which is about the thickness of a dime.

   Tape may be much closer to the erase head. It is permissable for the tape to very lightly touch the erase head or to just clear it.

   Observe the FIXED TAPE GUIDES at the entrance and the exit of the head block. Tape should ride through the slots without skew or crinkling.

   NOTE: Skewing and crinkling may occur if the tape lifters are adjusted for too much outward travel.

2. Put the transport into STOP mode. TAPE LIFTERS should move to their INWARD position.

   Clearance between the TAPE LIFTERS and the tape should be from .010 to .015 inches. The clearance at BOTH pins should be equal.

If adjustments are necessary:
(See Figure 83, page 10-45 for a pictorial drawing of this assembly.)

With tape loaded, put the transport into STOP mode.

1. Adjust the clearance between the tape and the reproduce head.

   Hold the manual tape lifter pin all the way to the LEFT. Adjust the OUT LIMIT CAM. *(See Fig. 29, page 5-6,7)*

   Clearance between the tape and the reproduce head should be .060 ±.010 inches.

2. Adjust the clearance between the tape and the erase head.

   Hold the manual tape lifter pin all the way to the LEFT. Adjust the length of the LIFTER TIE BRACKET.

   Set the bracket length so that the tape barely clears the ERASE HEAD.

3. Adjust the solenoid position.

   Put the transport into FWD or RWD mode. The SOLENOID will pull IN. Check that the SOLENOID SPRING is slightly stretched. Adjust the SOLENOID position if necessary.

   CAUTION
   If the spring is too tight, the SOLENOID will not seat properly. After an adjustment, switch from STOP mode to FWD mode several times and check that the plunger is moving in and out freely.

4. Adjust the tape lifter inward position.

   Put the transport into STOP mode. The PLUNGER LIMIT bracket limits the inward travel of the tape lifters.

   Adjust the PLUNGER LIMIT bracket so that the (LEFT) tape lifter clears the tape by .010 to .015 inches (.3 mm to .4 mm).

   Check that the RIGHT tape lifter clears the tape by the same amount as the LEFT tape lifter THE TWO LIFTERS MUST HAVE THE SAME CLEARANCE.

   If the two clearances are not alike, the lifter tie bracket has not been properly adjusted. Go back to Step 2 of this procedure.

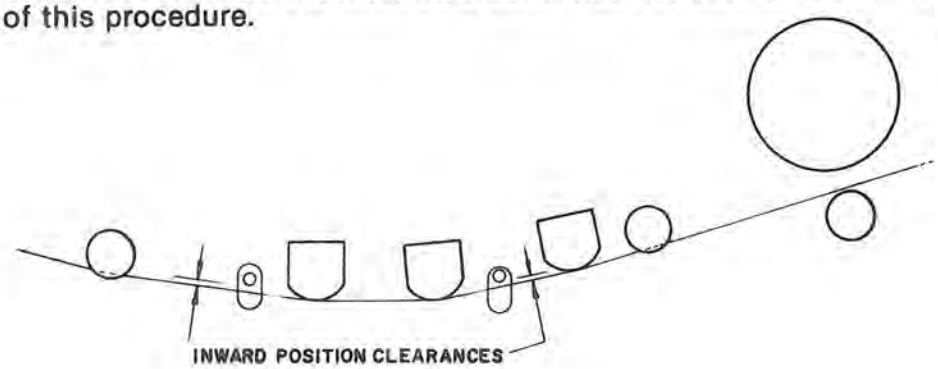

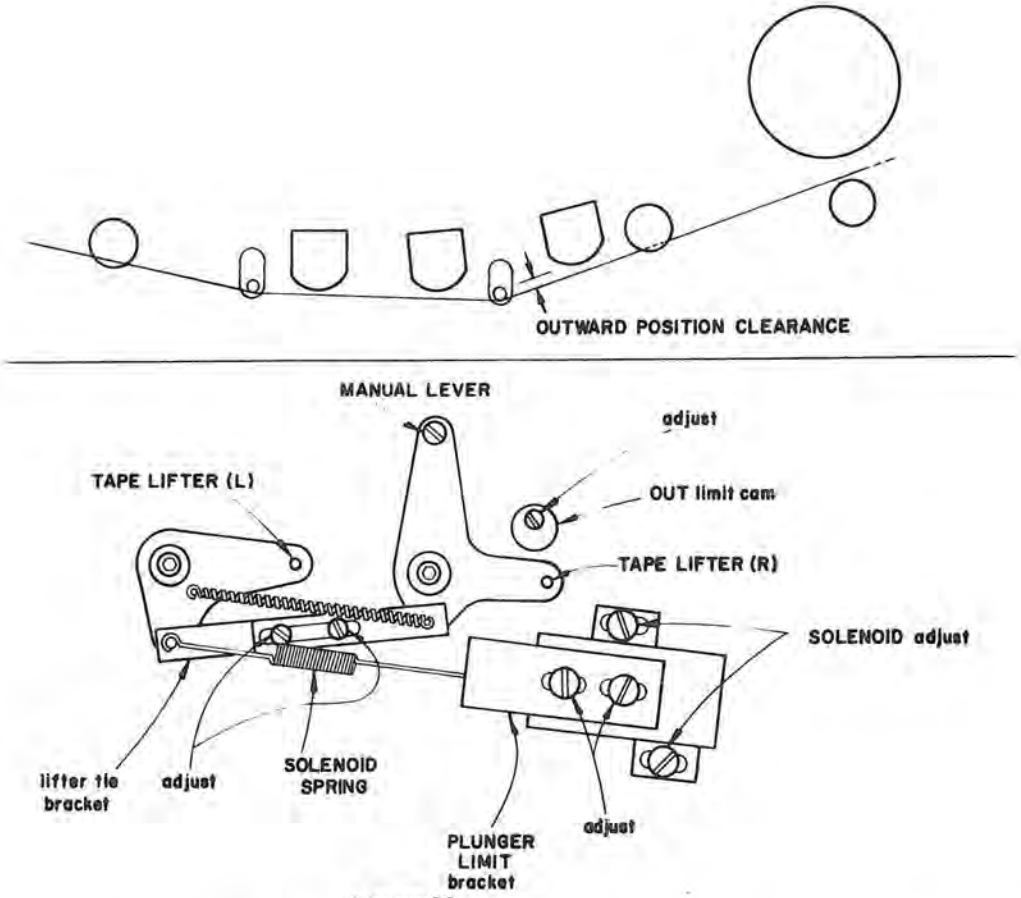

Figure 29

5.4 "DANCER ARM" FLUTTER FILTER TEST AND ADJUSTMENTS

TEST

Dancer Arm position depends partially on proper tape tension. Any change of reel motor adjustments will affect the "NORMAL" position of the Dancer Arm.

1. Load a roll of tape. Shuttle half of the tape to the takeup reel, so that the tape load is balanced between the two reels.

   The NORMAL position of the Dancer Arm, in PLAY or RECORD mode, should NOW BE NEAR the center of its travel arc.

2. Put the transport into STOP mode. The Dancer Arm will rest near the right end of its travel arc.

   Light the Dancer Arm well enough to see its small movements.

   Put the transport into PLAY mode. Observe the transition from STOP to PLAY mode several times. The Arm should swing to the LEFT—just touch the left end stop—then swing back to its "normal" center position.

3. The return to center position after touching the left end stop is controlled by the AIR DAMPER adjustment.

   IF THE SYSTEM IS UNDERDAMPED—The Dancer Arm will overshoot its "normal" center position, and then return to center. The Arm movements will be quick and relatively large. The Dancer Arm is **not damping** the small, quick tape movements which contribute to flutter.

IF THE SYSTEM IS OVERDAMPED—The Dancer Arm will be sluggish in its return to its "normal" center position. Two faults may be visible:

A. The tape may lose contact with the Dancer Arm for a fraction of a second while the Arm is returning to center position.

B. The Dancer Arm may "bounce" back toward the left before it reaches its "normal" center position. When the pressure in the air cylinder is momentarily high enough to overcome the mechanical spring tension.

The Dancer Arm is **too sluggish** to follow the small, quick tape movements which contribute to Flutter.

THE DAMPING SHOULD BE VERY CLOSE TO "CRITICAL." Critical damping can be defined as "moving to its new position as quickly as possible WITHOUT OVERSHOT OR OSCILLATION."

If adjustments are necessary:
(See Figure 84, page 10-47 for pictorial drawing of this assembly.)

CAUTION
The following procedure requires sensitive fingers and careful visual judgments. The AIR DAMPER adjustment requires a skill which is easily acquired, but needs careful attention to detail.

DO NOT CHANGE THE FACTORY SETTINGS until you have carefully evaluated the TEST above, and determined that the mechanism needs adjustment. BE SURE THAT THE PROPER TOOLS ARE AVAILABLE before attempting adjustment or replacement of parts.

TO ADJUST THE "NORMAL" DANCER ARM POSITION:

The four steel cables between the Dancer Arm and the spring mounting bracket *(top of deck)* furnish the spring tension for the Dancer Arm. The tension may be adjusted by loosening the two screws which hold the bracket and moving *(or twisting)* the bracket.

Unthread the tape so that it does not interfere with the movement of the Arm. Test the tension at the "normal" CENTER position as shown in Figure 30.

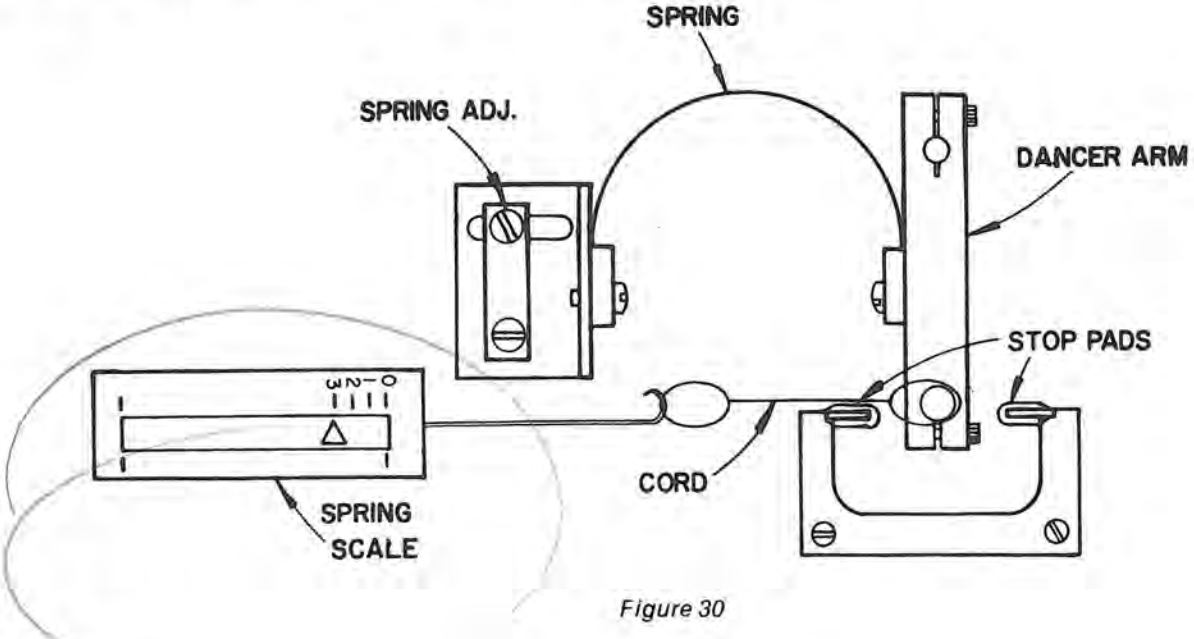

Figure 30

Pull the Dancer Arm to the center point of its arc. BE SURE that you pull the spring scale at a RIGHT ANGLE to the Arm. Before reading the tension, TAP GENTLY *(with a small object such as a pencil)* ON THE SPRING SCALE so as to overcome its friction.

The tension should read 3 ounces on a ¼" machine (85 gms) and 5 ounces on a 1" machine (143 gms).

TO ADJUST THE DAMPING CYLINDER:

CAUTION:
This AIRPOT DAMPING CYLINDER is a delicate GLASS tube. Make all adjustments with great care. NEVER USE EXCESSIVE FORCE.

Remove ALL damping by loosening the nut on the rear of the air cylinder. Use a ¼ inch nut driver, NOT a screwdriver for this adjustment.

FEEL the action of the air cylinder by repeatedly pushing the Dancer Arm from its rest position *(right end stop)* to the left end stop.

SLOWLY TIGHTEN the adjustment nut, no more than ¼ turn at a time. AS SOON AS YOU CAN FEEL the damping action of the air cylinder, turn the adjustment nut NOT MORE THAN ⅛ turn into the "active" adjustment range.

Replace the tape into its normal threaded configuration, and check the damping as in test 2 above.

Make VERY SMALL adjustments and retest until you have achieved CRITICAL DAMPING as described above.

5.5 BRAKE TEST AND ADJUSTMENT

TEST

NOTE:
The following tests and adjustments apply to the "fail-safe" mechanical brakes ONLY. This system brakes the tape reels in "Power OFF" or "Broken Tape" conditions.

Dynamic braking is furnished by the SERVO SYSTEM which drives the reel motors.

1. TEST THE BRAKING TENSION OF BOTH TURNTABLES IN BOTH DIRECTIONS.

   Power is not needed for this test. Remove reels from the turntables. Move the turntables by hand.

   The supply turntable should brake hard in the COUNTER-CLOCKWISE direction and only half as hard in the CLOCKWISE direction.

   The takeup turntable should brake hard in the CLOCKWISE direction and only half as hard in the COUNTER-CLOCKWISE direction.

   Spooling OUT direction brakes HARD. Spooling IN direction brakes only half as hard.

2. TEST BRAKE RELEASE

   Unplug BOTH reel motors. Apply power to the machine. Insert an opaque card into the tape-break sensor slot. Brake Solenoids should be ON. Move the turntables by hand.

BOTH turntables should turn freely—with no drag in either direction.

IF ADJUSTMENTS ARE NECESSARY:
(Refer to Fig. 31, page 5-10 for adjustments, and to Fig. 85, page 10-49 for a pictorial drawing of this assembly.)

1. IF BRAKE TENSION MUST BE ADJUSTED:

Remove power from the machine. Load an empty 10" dia. NAB reel on the supply turntable. Wrap a cord several times around the reel hub in a CLOCKWISE direction. Be sure that the cord overlaps so as to lock the cord to the reel.

Attach a spring scale to the free end of the cord. Pull slowly outward with the spring scale. Do not allow the cord to rub against the reel flanges.

Read the MAXIMUM tension achieved before the reel turns. This reading should be 4 ounces ±½ ounce *(113 gm ±14 gm)*. This is the REELING IN direction.

Remove the cord and wind in a COUNTER-CLOCKWISE direction. Read the MAXIMUM tension achieved before the reel turns. This reading should be 8 ounces ±½ ounce *(227 gm ±14 gm)*.

If the tension does not meet these specifications, loosen the spring adjustment nuts and tighten or loosen the spring.

Change the reel to the takeup turntable. Repeat the procedure described above. NOTE, however, that the REELING IN direction and the REELING OUT direction for this turntable are OPPOSITE from the supply turntable.

Braking tensions for the takeup reel are: 4 ±½ ounce in a COUNTER-CLOCKWISE direction and 8 ±½ ounce in a CLOCKWISE direction.

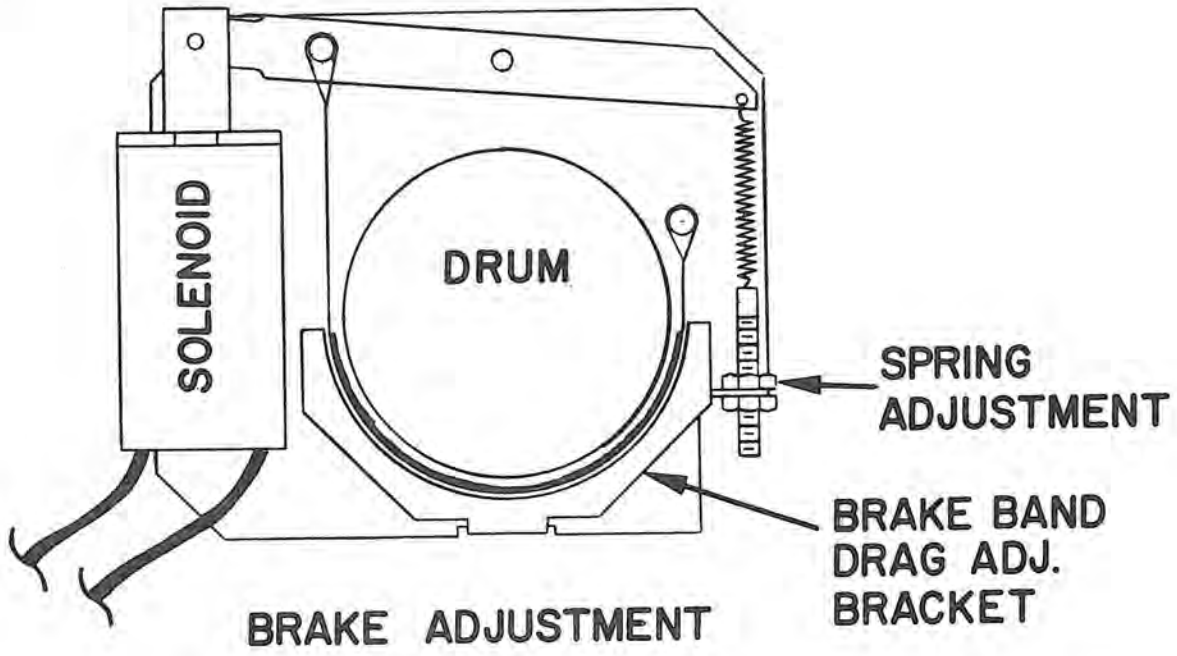

Figure 31

2. IF BRAKE RELEASE MUST BE ADJUSTED:

   Unplug BOTH reel motors. Apply power to the machine. Remove the tape reel. Insert an opaque card into the tape break sensor slot. The brake solenoids should be activated.

   BOTH turntables MUST turn easily without brake drag. Inspect the brake assembly. Be sure that the solenoid is pulling ALL THE WAY into its seat. TOO MUCH SPRING TENSION WILL HOLD THE SOLENOID OUT OF ITS SOCKET.

   The brake band must not touch the drum when the solenoid is activated. The bracket which restricts the outward movement of the brake band is normally adjusted so that the MOVABLE END of the band is held closer to the hub than the FIXED END of the band.

5.6 TAPE TENSION TEST AND ADJUSTMENT

TEST

With tape loaded, put the transport into PLAY mode. The tensions of the supply reel and the takeup reel should balance so that the "Dancer Arm" rides close to the CENTER POINT of its travel arc.

Test the tension of the tape with a finger on each side of the capstan. The tension should "FEEL" just about the same on each side.

Put the transport into FWD mode. Observe the acceleration of the tape. Change into RWD mode. Observe the change from FAST FORWARD to FAST REVERSE travel. If any jerkiness or LOSS OF TENSION is observed AT ANY TIME, then the adjustments on the Analog Torque will have to be checked.

NOTE:
When initiating a Fast mode, HIGH tape tensions occur during acceleration. The Dancer Arm will be driven to the extreme left end of its travel arc. After proper speed is attained, the Dancer Arm can return to its relaxed position.

The factors affecting the exact position of the Dancer Arm are:

1. The REELING RADIUS of the supply reel.
2. The DIRECTION of tape travel.

IF ADJUSTMENTS ARE NECESSARY:
(See Figure 58, page 10-17 for a complete schematic and board layout.)

1. DC OFFSET NULL ADJUSTMENT *(On Analog Torque Board)*

   A. Turn power ON. Stop mode, with tape threaded and all reel motion arrested. *(See NOTE below)*

      Connect the + lead of a DC voltmeter *(1 volt full scale range)* to TP 1. – lead should be connected to chassis.

      Adjust R 12 for "0" volts. *(This voltage can swing negative as well as positive.)* It may be difficult to get an EXACT NULL. If this adjustment can be set within ±.1 volt, it will be satisfactory.

   B. Repeat the above procedure for the takeup reel NULL adjustment by connecting the meter to TP 2, and adjusting R 36.

NOTE:
If tape is in motion for the above adjustment, a NULL cannot be achieved. Motion can be stopped by removing tape from the PHOTO CELL. This should allow a rough adjustment, but proper alignment MUST be made with tape threaded through the PHOTO CELL. If motion still persists after this rough adjustment, it may be necessary to reduce the idle settings.

2. IDLE ADJUSTMENT

   A. Remove tape. Block the tape break sensor with an opaque card inserted into the slot. Turn power ON, STOP mode.

      Adjust R 18 for a slow idle of the supply reel motor. *(About 20 RPM or 1 revolution every 3 seconds.)*

   B. Repeat the above adjustment for the takeup reel motor by adjusting R 111.

   C. Reload tape, STOP mode. The slow idle should take up the slack tape after loading.

NOTE:
Idle speed should be set as HIGH as practical as this will aid tape handling when entering STOP mode. The worst case may be observed with a full reel of tape VS and empty reel. Adjustments can be made during this test.

Reverse the position of the full reel and the empty reel. Be sure that the IDLE adjustments are NOT set high enough to produce TAPE CREEP.

3. TENSION ADJUSTMENT

   The proper method for setting supply tension on an MCI tape machine is:
   A. With tape loaded (half of the tape on each reel) run machine in play at 15 ips.

      Using tension gauge, adjust left tape tension (supply motor) of tape leaving reel to:

      JH-110A ¼ inch tape — 3 oz.
      JH-110A ½ inch tape — 4 oz.
      JH-110A 1 inch tape — 5 oz.

   B. Check and adjust dancer arm for center of motion with machine in play at 15 ips, and half of the tape on each reel.

   C. With machine in play, disengage pinch roller from capstan and adjust take up tension such that play speed (15 ips) is simulated without benefit of pinch roller or capstan, such that dancer arm is re-centered.

      At this time, with machine in play, you should be able to manually engage and disengage pinch roller without any noticeable speed change. This means the capstan is doing no work, only metering the tape.

5.7 CAPSTAN SPEED TEST AND ADJUSTMENT

TEST:
1. Switch the REFERENCE SELECTOR switch into VARIABLE mode, LO SPEED. With tape threaded, press the PLAY button.

   FEEL the tape motion by pressing the back of the tape with a finger.

   SLOWLY vary the SPEED knob from lowest to highest setting. The TAPE SPEED should vary smoothly without sudden changes.

2. Change the SPEED switch into MED positon. Repeat the above test.

3. Change the SPEED switch into HI position. Repeat the above test.

   If these tests have shown smooth changes, with no sudden shifts or jerks, you may assume that the Phase Locked Loop circuit is maintaining its lock throughout the full range of speeds.

NOTE:
It is normal for the machine to switch to STOP mode whenever the SPEED SWITCH is change.

IF ADJUSTMENTS ARE NECESSARY:
(See Figure 56, page 10-13 for a complete schematic and board layout for the Capstan Tach board. The capstan tach is mounted on the bottom end of the capstan motor, inside the metal bell.)

1. Check the capstan tachometer by connecting an oscilloscope to TP 1 on the Capstan Tach board.

   Set the REFERENCE SELECTOR switch to VAR, the SPEED switch to HI. Initiate PLAY mode. Turn the speed knob fully clockwise. Peak-to-peak voltage should be 800 mv. with little amplitude jitter.

   ADJUST THE CAM LOCATED ON THE TACH BOARD FOR MINIMUM AMPLITUDE JITTER AT TP 1.

See Figure 57, page 10-15 for a complete schematic and board layout for the Phase Locked Loop board.

2. Put the transport into STOP mode. No voltage should be present at TP 1 on the Phase Lock Loop board.

   Spin the Capstan by hand. 4 to 5 volt pulses should be present at TP 1 while the Capstan is turning.

3. TO CHECK THE REFERENCE FREQUENCIES

   Attach a digital counter to TP 2 on the Phase Locked Loop board.

   Reference frequencies should read as follows:

	STANDARD MODEL	LOW SPEED MODEL
HI SPEED	19.2 kHz (30 IPS)	9.6 kHz (15 IPS)
MED SPEED	9.6 kHz (15 IPS)	4.8 kHz (7.5 IPS)
LO SPEED	4.8 kHz (7.5 IPS)	2.4 kHz (3.75 IPS)

4. TO ADJUST THE VCO CALIBRATOR

   Set the machine to EXTERNAL REFERENCE, HI SPEED. Connect the digital counter to TP 2 on the Phase Locked Loop board.

   Adjust the VCO calibrator (R 18) to 19.2 kHz on the standard model or 9.6 kHz on the low speed model.

5. TO SET THE PHASE LOCKED LOOP CIRCUIT GAIN

Load a roll of tape. Set the REFERENCE SELECTOR switch to VARIABLE. Set the SPEED switch to HI. Turn the SPEED knob to full clockwise setting.

Attach a scope to TP 3 and select a vertical gain of 2.0 v/cm.

Adjust the LOOP GAIN control (R 42) for a DUTY CYCLE of +30%, −70%. The pulse should look like this:

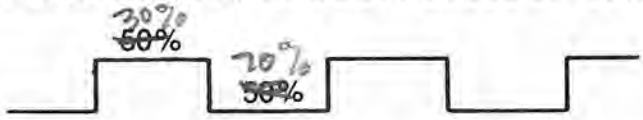

5.8 MANUAL VELOCITY CONTROL TEST AND ADJUSTMENT

TEST:
Load a roll of tape. Put the transport into STOP mode. Set the MVC JOYSTICK well over to the RIGHT END of its travel arc. While maintaining good contact to the transport escutcheon with one hand, TOUCH the Joystick with the other hand.

The LED at the tip of the JOYSTICK should come ON. The transport should go into FAST FORWARD motion *(MVC mode)*. Move the Joystick left and right until you find the point of no movement *(near the center)*.

Set the JOYSTICK to the LEFT END of its travel arc, establishing a fast REWIND motion. Release the JOYSTICK.

The transport should STOP.

IF ADJUSTMENTS ARE NECESSARY:
See Figure 61, page 10-23 for a schematic and board layout of the INTERFACE/LAMP driver bd.

Adjust R3 on the INTERFACE/LAMP DRIVER board until the desired sensitivity is reached.

The CENTERING ADJUSTMENT is made by loosening the two Allen set screws in the Joystick assembly. Hold the Joystick in the center position and turn the potentiometer with long-nosed pliers until a motion null is reached. Retighten the set screws.

Be sure that the Joystick does not short out to the deck plate at either end of its travel. Tabs on the potentiometer mounting bracket can be bent to restrict the travel of the Joystick.

5.9 AUDIO ELECTRONICS ALIGNMENT

MCI recording systems are aligned with MRL elevated level alignment tapes *(0 VU = 250 nanowebers per meter)*.

NOTE:
"Standard" recording level has been set at a fluxivity level of 185 nanowebers per meter (nWb/m).

An elevated level of 250 nanowebers per meter is used throughout these tests and adjustments. This level (250 nWb/m) corresponds to the "Elevated" level MRL REPRODUCE ALIGNMENT TAPES. It therefore corresponds to the "0 VU" level referred to in these instructions.

The distortion level is tested at recording levels of +3 VU which is a fluxivity level 9 dB above the "Standard" level or 370 nWb/m.

5.9.1 REPRODUCE LEVEL ADJUSTMENT

NOTE:
Instructions given below are for the use of elevated level tapes. If standard level tapes are being used, all instructions should read "SET TO −3 VU" instead of "SET TO 0 VU."

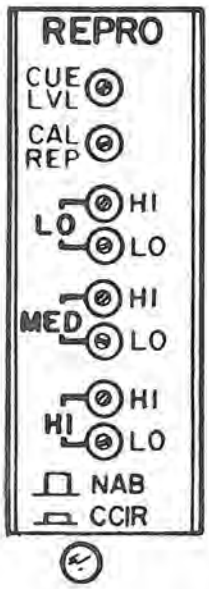

Figure 32

Clean and demagnetize the heads. Load a 15 ips reproduce alignment tape.

SET THE ELECTRONIC CONTROLS.

Set the CAL REPRO switch to CAL position. Press the REPRO button. Press the SAFE button.

SET THE TRANSPORT CONTROLS.

Fixed reference. Choose 15 ips SPEED. MED is standard machine, HI speed if low speed machine. Put into PLAY mode. Locate the 1 kHz LEVEL SET tone on the alignment tape. ON THE REPRO CARD, adjust CAL REP for a reading of 0 VU on the channel meter.

RESET THE ELECTRONIC CONTROLS.

Press the CUE button. On the REPRO card, adjust CUE LVL for a reading of 0 VU on the channel meter.

ADJUST ALL CHANNELS AS DESCRIBED ABOVE.

The above adjustments set the gains of the reproduce circuits so that BOTH the REPRODUCE HEAD and the RECORD HEAD (used as a reproduce head in cue mode) produce a standard level output.

5.9.2 HEAD WRAP ADJUSTMENT

The HEAD WRAP adjustment is an eccentric mounting screw which controls the position of the head gap in relationship to the tape which is entering or leaving the head surface. The audio level peaks when the GAP is located in the exact center of the angle so that the tape touches the head an equal distance on each side of the GAP.

SET THE ELECTRONIC CONTROLS.

Set the CAL REPRO switch to CAL position. Press the REPRO button. Press the SAFE button.

SET THE TRANSPORT CONTROLS.

Fixed reference. Choose 15 ips speed. Put into PLAY mode. Locate the 10 kHz tone on the alignment tape. *Refer to Figure 28 on page 5-4 for the following adjustment:* On the HEAD BLOCK, turn the REPRO HEAD WRAP adjustment screw for peak output on the channel meter.

RESET THE ELECTRONIC CONTROLS.

Press the CUE button. ON THE HEAD BLOCK, turn the RECORD HEAD WRAP adjustment screw for peak output on the channel meter.

5.9.3 AZIMUTH ADJUSTMENT

The AZIMUTH adjustment sets the relative phase of the tracks.

Two methods of adjustment are recommended:

METHOD 1

An MCI JH-22 PHASE METER is the ideal test instrument for this adjustment. This meter reads, directly in degrees, the RELATIVE PHASE of any two audio signals fed to its two inputs.

Connect the two outside tracks of the recorder to the two inputs of the phase meter.

SET THE ELECTRONIC CONTROLS.

Set the CAL REPRO switch to CAL position. Press the REPRO button. Pres the SAFE button.

SET THE TRANSPORT CONTROLS.

Fixed reference. Choose 15 ips speed. Put into PLAY mode. Locate the 10 kHz tone on the alignment tape. *Refer to Figure 28 on page 5-4 for the following adjustment.* Adjust the AZIMUTH adjust screw for the REPRODUCE HEAD until you find the LOWEST RELATIVE PHASE reading on the phase meter.

RESET THE ELECTRONIC CONTROLS.

Press the CUE button. Adjust the AZIMUTH adjust screw for the RECORD HEAD until you find the LOWEST RELATIVE PHASE reading on the phase meter.

METHOD 2

A simultaneous reading of a Lissajous figure on your oscilloscope and observation of the output meters of all tracks will give a satisfactory AZIMUTH adjustment.

Set the oscilloscope up with the output of the two outside tracks connected to the vertical input and the horizontal input respectively.

Adjust the GAIN of the horizontal channel and the vertical channel to be as IDENTICAL AS PRACTICAL.

SET THE ELECTRONIC CONTROLS.

Set the CAL REPRO switch to CAL position. Press the REPRO button. Press the SAFE button.

SET THE TRANSPORT CONTROLS.

Fixed reference. Choose 15 ips speed. Put into PLAY mode.

Using the 10 kHz tone from the alignment tape as a signal, observe the Lissajous figure on your scope screen. Ideally, the figure should be a straight line TILTED exactly 45° from the vertical.

Changing the AZIMUTH adjustment will change the TILT of the Lissajous figure.

Turn the REPRODUCE HEAD AZIMUTH adjustment screw until the TILT of the Lissajous figure is 45° from vertical.

AT THE SAME TIME, watch the output meters for all channels. DO NOT turn the AZIMUTH screw far enough for the outpout to drop more than a small amount.

RESET THE ELECTRONIC CONTROLS.

Press the CUE button. Turn the RECORD HEAD AZIMUTH adjustment screw until the TILT of the Lissajous figure is 45° from vertical. AT THE SAME TIME, watch the output meters for all channels. DO NOT turn the AZIMUTH screw far enough for the output to drop more than a small amount.

5.9.4 REPRODUCE EQUALIZATION ADJUSTMENTS

NOTE:
In all of the following instructions for adjusting equalization circuits, both RECORD and REPRODUCE, we have assumed a STANDARD SPEED machine—7½, 15, 30 ips. If your machine is a LOW SPEED machine—3¾, 7½, 15 ips—please MARK YOUR MANUAL so that the designated alignment tapes match the speed of your machine.

Load the proper HI speed alignment tape on the machine *(30 ips for a standard machine, 15 ips for a low speed machine)*. Locate the 10 kHz tone on the alignment tape.

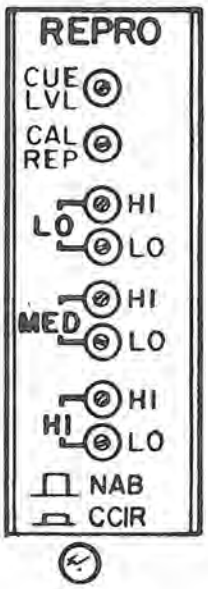

Figure 32

SET THE ELECTRONIC CONTROLS.

Set the CAL REPRO switch to CAL position. Press the REPRO button. Press the SAFE button.

SET THE TRANSPORT CONTROLS.

Fixed reference. HI speed. Put into PLAY mode. ON THE REPRO CARD, adjust the HI speed, HI frequency potentiometer for 0 VU reading on the channel output meter.

ADJUST ALL CHANNELS THE SAME WAY.

CHANGE TO THE APPROPRIATE MED SPEED ALIGNMENT TAPE.

SET THE TRANSPORT CONTROLS.

Change to MED speed. All other controls remain the same. ON THE REPRO CARD, adjust the MED speed, HI frequency potentiometer for 0 VU reading on the channel output meter.

ADJUST ALL CHANNELS THE SAME WAY.

CHANGE TO THE APPROPRIATE LO SPEED ALIGNMENT TAPE.

SET THE TRANSPORT CONTROLS.

Change to LO speed. All other controls remain the same. ON THE REPRO CARD, adjust the LO speed, HI frequency potentiometer for 0 VU reading on the channel output meter.

ADJUST ALL CHANNELS THE SAME WAY.

The above adjustments "flatten" the high frequency response of the tape and the heads.

5.9.5 LOW FREQUENCY EQ ALIGNMENT NOTES

The REPRODUCE—LO FREQUENCY alignment requires special handling because it has been found that the response of ANY reproduce head below 500 Hz may vary by several dB. This is particularly true when playing a FULL WIDTH alignment tape.

At the lower audio frequencies, the recorded magnetic track is physically longer for each individual cycle. When the tape used for a single cycle becomes LONG with respect to the reproduce head, the geometry of the head becomes very significant. Also the angle the tape takes in leaving the GAP area *(called head wrap)* becomes significant. The "corners" of the stack of laminations inside the reproduce head may begin to act as auxiliary "GAPS" whose output ADDS TO *(or subtracts from)* the output of the TRUE GAP.

Thus the total output at any given frequency will depend on the PHASE RELATIONSHIP of the TRUE GAP and the AUXILIARY GAPS. This output varies with frequency, creating "LOW FREQUENCY BUMPS" in the output characteristics.

Use of a FULL WIDTH alignment tape adds another problem which is significant ONLY during alignment. It does NOT affect normal operation of the machine.

With low frequency audio recorded the FULL WIDTH of the tape, the reproduce head "SEES" magnetic flux both above and below its normal track width. This "Fringing Effect" is not important above 500 Hz.

Note that the "Fringing Effect" does NOT OCCUR when the reproduce head is reading the track which was recorded at the correct width, as in the normal use of the machine.

THEREFORE:
We recommend that the REPRODUCE—LO FREQUENCY alignment be made AFTER completing the RECORD adjustments.

5.9.6 ERASE ADJUSTMENTS

NOTE:
A single 120 kHz oscillator supplies the power for all ERASE and BIAS functions in this recorder. It is located on the STRIP board for tracks 1 & 2. This board is attached to the inner side of the rear panel of the ELECTRONICS assembly. If your machine has more than 2 tracks, the STRIP board used for the other tracks is similar with the oscillator section cut away.

FREQUENCY CHECK

NOTE:
The ERASE oscillator always operates when power is connected to the machine. This frequency check may be made with ANY setting of the controls.

Connect a frequency counter to C1 on the Electronics Mother board *(point D on the Mother Board layout, Figure 55, page 10-11).*

Using a NON-METALIC screwdriver, adjust T1 on channel 1 & 2 STRIP BOARD until the counter reads 120 kHz ±25 Hz.

WAVE SHAPE AND AMPLITUDE CHECK.

Connect an oscilloscope to point C on the Electronic Mother board. *(Refer to the board layout, Figure 55, page 10-11).* Load a roll of blank tape.

Set oscillator gain pot (R9) on strip board fully clockwise.

Set oscillator frequency for 120 kHz while in record mode. Set to second peak, going in a clockwise direction.

Monitor erase voltage on erase peaking capacitor (C1) on Audio Mother board at point 'A'.

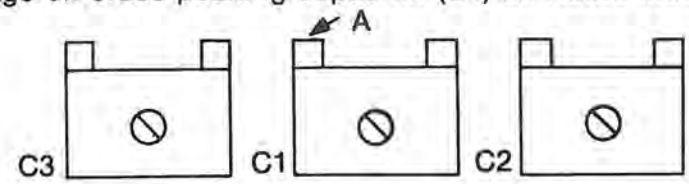

Turn C1 until peak voltage is reached. Do this to all channels.

Monitor erase voltage of channel with the lowest reading at point A of C1.

Adjust oscillator gain pot R9 (Strip board) counter-colocwise until voltage reading of 60-70 Vrms is obtained.

Adjust C1 for 50 Vrms on all channels. NOTE: Adjust C1 over peak to this voltage (CW).

Check for clipping on TP1 of Bias board. If clipped, turn C1 (Erase Peaking capacitor) in clockwise direction until signal is not clipping (all channels).

NOTE: TP1 will NOT show a perfect sine wave. Adjust ONLY if there is CLIPPING.

Re-verify step 3, insuring at least 45 Vrms.

5.9.7 BIAS ADJUSTMENTS

Connect an AC voltmeter capable of reading at 120 kHz to the output of the BIAS CARD. Connect to point E on the Electronics Mother board *(Refer to Figure 55, page 10-11).*

Figure 33

Load a roll of blank tape. Do NOT apply a signal.

SET THE ELECTRONICS CONTROLS.

Push the READY button.

SET THE TRANSPORT CONTROLS.

Fixed reference. LO speed. Put into RECORD mode. Turn the LO potentiometer on the BIAS CARD fully clockwise. The voltage reading should be about 20 volts at point E.

REPEAT THE ABOVE PROCEDURE FOR EACH CHANNEL.

RESET THE TRANSPORT CONTROLS.

MED speed. Put into Record mode. Turn the MED potentiometer on the BIAS CARD fully clockwise. The voltage reading should be about 20 volts at point E.

REPEAT THE ABOVE PROCEDURE FOR EACH CHANNEL.

RESET THE TRANSPORT CONTROLS.

HI speed. Put into RECORD mode. Turn the HI potentiometer on the BIAS CARD fully clockwise. The voltage reading should be 20 volts at point E.

REPEAT THE ABOVE PROCEDURE FOR EACH CHANNEL.

NOTE:
Presently available commercial tapes require about 13 to 18 volts of bias at point E. The above voltages show the reserve capability of this machine.

BIAS TRAP ADJUSTMENT

Connect an AC voltmeter to the BIAS TRAP. Connect at point F on the Electronics Mother board *(see Figure 55, page 10-11)*.

Load a roll of blank tape. Do NOT apply a signal.

SET THE ELECTRONIC CONTROLS.

Push the READY button.

SET THE TRANSPORT CONTROLS.

Fixed reference. MED speed. RECORD mode. Adjust C2 for minimum reading. The reading at point F should be less than .03 volts.

ADJUST ALL CHANNELS IN THE SAME WAY.

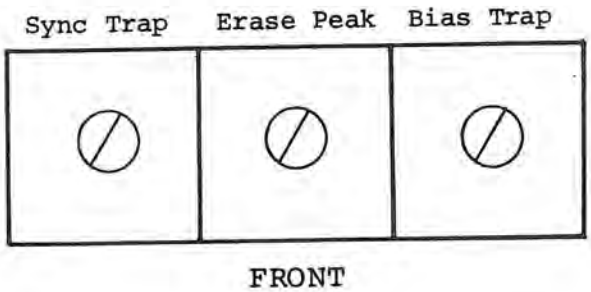

Figure 35

OPTIMIZE AND CALIBRATE BIAS

Follow tape manufacturers recommendations. If manufacturers recommendations are unavailable, MCI recommends 3 dB at 10 kHz overbias as a good rule of thumb at all speeds. Use reduced level of −10VU for 7½ and 3¾ ips.

MCI recommends overbiasing at 10 kHz due to increased resolution of the signal at the tape machine output.

Load a roll of blank tape. Apply a signal of +4 dB (0 VU).

SET THE ELECTRONIC CONTROLS.

Switch to REPRODUCE CAL. Switch to RECORD CAL. Press REPRO button. Press READY button.

SET THE TRANSPORT CONTROLS.

Fixed reference. LO speed. RECORD mode. Adjust BIAS potentiometer for peak, then overbias to meet frequency response and distortion specifications.

Read the VU meter of the channel being adjusted. With the transport running in appropriate speed, adjust the LO potentiometer on the Bias card. First turn the potentiometer COUNTER-CLOCKWISE to back off the reading well below peak value. Then turn the potentiometer CLOCKWISE to a peak reading. Continue turning clockwise until the reading drops according to the tape manufacturers recommendations.

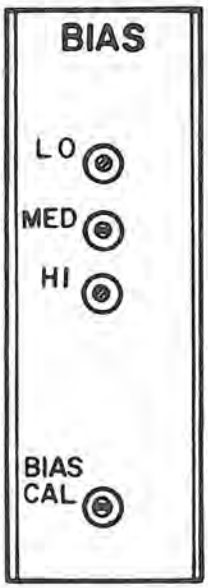

Figure 33

ADJUST ALL CHANNELS IN THE SAME WAY.

Reset the transport controls. MED speed. RECORD mode. OVERBIAS according to the recommendations of the tape manufacturer.

RESET THE TRANSPORT CONTROLS.

HI speed. Record mode. Follow the adjustment instructions above.

After optimizing BIAS for ALL THREE speeds, switch the transport to the speed you use most *(use MED speed if you have no preference).*

On the BIAS card, adjust BIAS CAL for a 0 VU reading on the channel meter.

5.9.8 RECORD ADJUSTMENTS

CALIBRATE RECORD AND RECORD CALIBRATE ADJUSTMENTS

Apply a 1 kHz signal at +4 dBm. Load a roll of blank tape.

Figure 34

SET THE ELECTRONIC CONTROLS.

Switch RECORD CAL to CAL position. Press REPRO button. Press READY button.

SET THE TRANSPORT CONTROLS.

Fixed reference. Set speed to 15 ips *(MED speed for standard machine, HI speed for slow speed machine).* ON THE RECORD CARD, adjust CAL REC potentiometer (recording adjustment) until the channel output meter reads 0 VU.

RESET THE ELECTRONIC CONTROLS.

Press INPUT button. ON THE RECORD CARD, adjust REC CAL potentiometer *(monitoring adjustment)* until the channel output meter reads 0 VU.

RESET THE ELECTRONIC CONTROLS.

Press INPUT button. ON THE RECORD CARD, adjust REC CAL potentiometer *(monitoring adjustment)* until the channel output meter reads 0 VU.

ADJUST ALL CHANELS IN THE SAME WAY.

NOTE:
Both the CAL REC and the REC CAL potentiometers are shown on the RECORD BOARD schematic, Figure 51, page 10-3.

The CALIBRATE RECORD adjustment sets the gain of the monitoring channel when it is in INPUT mode. This allows the operator to adjust incoming signal levels before starting to record.

5.9.9 CUE TRAP ADJUSTMENT

NOTE:
The CUE TRAP keeps BIAS signals used in channels in RECORD mode from interfering with the operation of other channels being used in CUE mode.

Cue mode uses the RECORD head of a channel as a REPRODUCE HEAD so that a NEW TRACK may be recorded which is synchronized with the previously recorded tracks.

Remove tape. DO NOT apply a signal. Place ALL REPRODUCE CAL switches in CAL.

SET THE ELECTRONIC CONTROLS.

Channel being adjusted: Press CUE button. Press SAFE button.

Adjacent channel(s): Press REPRO button. Press READY button.

NOTE:
If Channel 1 is being checked, Channel 2 is adjacent.
If Channel 2 is being checked, Channels 1 & 3 are adjacent.
If Channel 3 is being checked, Channels 2 & 4 are adjacent.
And so on.

SET THE TRANSPORT CONTROLS.

Fixed reference. MED speed. RECORD mode. Connect an AC voltmeter capable of reading at 120 kHz at the output of the channel being checked.

ON THE AUDIO MOTHER BOARD of the channel being checked, alternately adjust RI and C3 for minimum reading on the voltmeter. The reading should be less than −40 dBm. *(See Figure 55, page 10-11 for a schematic and board layout).*

ADJUST EACH CHANNEL CUE TRAP IN THE SAME WAY.

5.9.10 RECORD EQUALIZATION ADJUSTMENT

Apply a 10 kHz signal. Use 0 VU for 15 and 30 ips, −10 VU for all slower speeds. Load a roll of blank tape.

SET THE ELECTRONIC CONTROLS.

Switch the CAL RECORD switch to CAL position. Press the REPRO button. Pres the READY button.

SET THE TRANSPORT CONTROLS.

Fixed reference. LO speed. RECORD mode. ON THE RECORD CARD, adjust the LO trimmer.

RESET THE TRANSPORT CONTROLS.

MED speed. RECORD mode. ON THE RECORD CARD, adjust the MED trimmer.

RESET THE TRANSPORT CONTROLS.

HI speed. RECORD mode. ON THE RECORD CARD, adjust the HI trimmer.

ADJUST ALL CHANNELS IN THE SAME WAY.

Figure 34

5.9.11 REPRODUCE — LOW FREQUENCY ADJUSTMENT

NOTE:
See page 5-18, section 5.9.5 for a theoretical discussion of this adjustment.

Connect a variable frequency audio generator to the input. Load a roll of blank tape.

SET THE ELECTRONIC CONTROLS.

Switch the REPRODUCE CAL switch to CAL position. Press the REPRO button. Press the READY button.

SET THE TRANSPORT CONTROLS.

Fixed reference. LO speed. RECORD mode. WATCH THE CHANNEL OUTPUT METER as you slowly sweep the audio signal from 30 Hz to 100 Hz. OBSERVE THE "LOW FREQUENCY BUMPS."

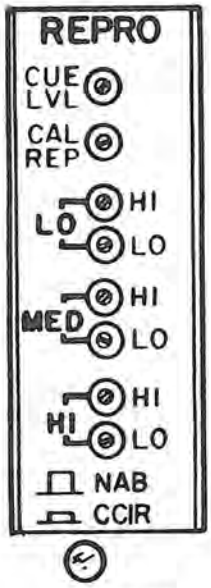

Figure 32

ON THE REPRO CARD, adjust the LO speed LO frequency potentiometer while sweeping the audio signal through the above range.

CENTER the "BUMPS" about the ZERO LINE so that the response over the entire range achieves maximum flatness.

RESET THE TRANSPORT CONTROLS.

MED speed. RECORD mode. ON THE REPRO CARD, adjust the MED speed LO frequency potentiometer while sweeping the audio signal through the range from 30 Hz to 100 Hz.

CENTER the "BUMPS" about the ZERO LINE so that the response over the entire range achieves maximum flatness.

RESET THE TRANSPORT CONTROLS.

HI speed. RECORD mode.

ON THE REPRO CARD, adjust the HI speed LO frequency potentiometer while sweeping the audio signal through the range from 30 Hz to 100 Hz.

CENTER the "BUMPS" about the ZERO LINE so that the response over the entire range achieves maximum flatness.

ADJUST ALL CHANNELS IN THE SAME WAY.

5.9.12 RECORD LINEARITY ADJUSTMENT

The INTERMODULATION DISTORTION of tapes varies widely with type of tape and with manufacturing proceses. The RECORD LINEARITY adjustment *(on each record card)* can compensate for a wide variation in characteristics provided the procedure outlined below is followed very closely.

NOTE:
COMPLETE ALL MECHANICAL ADJUSTMENTS AND SET ALL BIAS, RECORD, REPRODUCE LEVELS BEFORE STARTING THIS PROCEDURE.

The relationship between INTERMODULATION DISTORTION and RECORD LEVEL is shown below. *This is a generalized chart with no attempt to make it conform to a particular type of tape.*

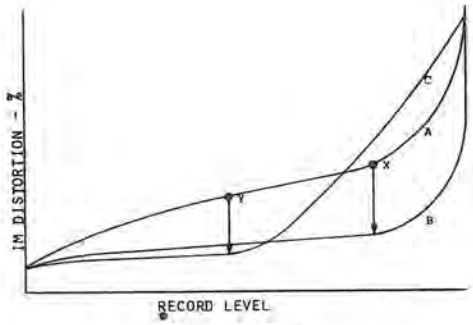

Figure 36

Curve "A" in Figure 36 shows the distortion VS record level for a typical tape.

Curve "B" is the distortion VS record level which CAN be achieved with correct adjustment of the linearity control.

Curve "C" is the distortion VS record level which MAY result if improper adjustment procedure is followed.

SET THE ELECTRONIC CONTROLS.

Set the CAL REPRODUCE switch to CAL position. Set the CAL RECORD switch to UP position (NOT CAL). Press the REPRO button. Press the READY button.

SET THE TRANSPORT CONTROLS.

Fixed reference. Choose the most used speed *(if no preference, use 15 ips)*. Put into RECORD mode.

Connect the IM analyzer to the input and the output of the track to be tested. Turn the front panel RECORD potentiometer to ¼ scale.

Figure 34

CAREFULLY FOLLOW THIS PROCEDURE.

1. ON THE RECORD CARD, turn the LIN potentiometer to minimum *(counter-clockwise)*.
2. Slowly increase the RECORD LEVEL *(turn the front panel control)* until the IM analyzer shows a distortion reading of about 3%. *(Shown as point X in Figure 36, page 5-24.)*
3. Adjust the LIN potentiometer—ON THE RECORD CARD—until a minimum distortion reading is obtained. This reading is generally below 1½ %.

   A distortion VS record level curve similar to curve "B" in Figure 36 should result.

   Refer to Figure 51, page 10-3 for a full schematic of this board. The linearity potentiometer is R43.

ADJUST ALL CHANNELS IN THIS WAY.

CAUTION:
THE AUDIO LEVEL **MUST** BE HIGH ENOUGH TO PRODUCE 3% IM DISTORTION BEFORE THE RECORD LINEARITY CONTROL IS ADJUSTED. IF THIS ADJUSTMENT IS MADE AT A LOWER AUDIO LEVEL *(SUCH AS POINT "Y" IN FIGURE 36)* A RECORD LEVEL VS DISTORTION RESPONSE SIMILAR TO CURVE "C" IN FIGURE 36 MAY RESULT.

THIS LINEARITY ADJUSTMENT SHOULD BE MADE WHENEVER A NEW TYPE OF TAPE IS TO BE USED. OPTIMUM ADJUSTMENT VARIES WIDELY WITH TAPE CHARACTERISTICS.

5.9.13 DEPTH OF ERASURE ADJUSTMENT

(ERASE HEAD WRAP and ERASE PEAKING adjustment)

Load a roll of BULK ERASED blank tape.

SET THE TRANSPORT CONTROLS.

Fixed reference. Speed 15 ips. Put into RECORD mode.

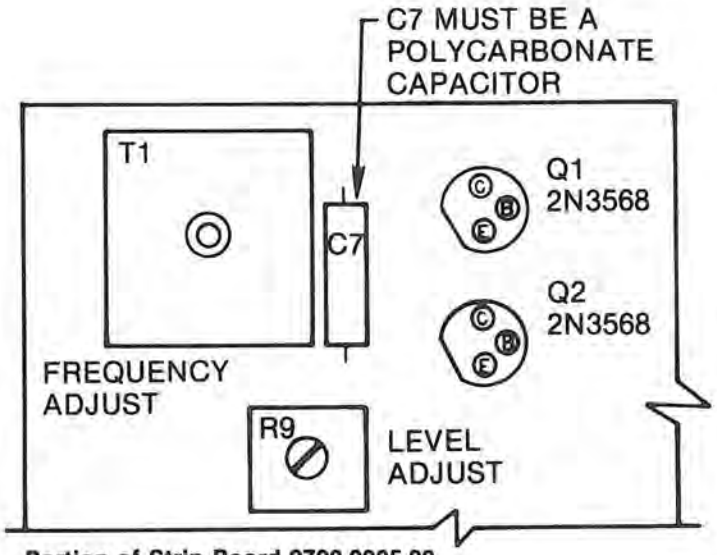

Portion of Strip Board 2700-0005-00

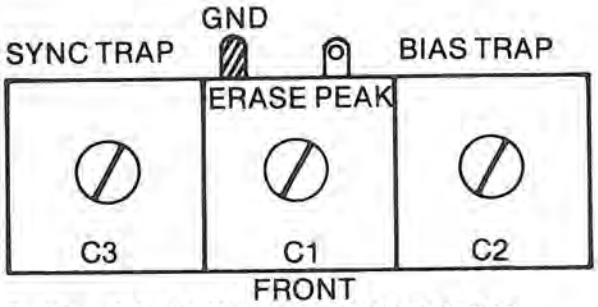

Portion of Audio Mother Board 2700-0017-00

Figure 37

NOTE:
The following procedure is for erase heads manufactured by Wolke Magnetics. Other manufacturers' heads may require different voltage levels.

1. Set the oscillator gain pot (R9) on the strip board 2700-0005-00 fully clockwise.
2. Adjust oscillator frequency for 120 kHz by adjusting T1 on strip board. Adjust for second peak going in clockwise direction.
3. Monitor voltage on erase peak capacitor on audio mother board 2700-0017-00.
4. Turn C1 until peak voltage is reached. Do this to all channels.
5. Monitor voltage off C1 of the lowest reading channel.
6. Turn oscillator gain pot (R9) counter-clockwise until voltage of 60-70 volts is obtained.
7. Adjust C1 on all channels for 50 volts. NOTE: Adjust C1 over peak to this voltage (turn trimmer screw clockwise).
8. Check for clipping on TP1 of the bias and erase board. If clipped turn C1 in clockwise direction until signal is not clipped. Repeat for all channels.
9. Repeat step 3, insuring at least 45 vrms.

Figure 38

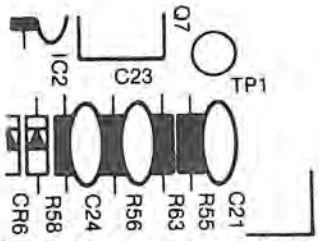

Portion of Bias & Erase Board 2700-0055-00

METHOD 1

Connect a WAVE ANALYZER to the channel under test. *(Use HP 3581 or equivalent.)*

Put the transport into PLAY mode. ZERO the wave analyzer on the playback of the 400 Hz tone. REWIND. Put the transport into RECORD MODE—NO SIGNAL INPUT. The wave analyzer should read −80 dB on each channel.

MAKE THE FOLLOWING ADJUSTMENTS WHILE READING THE OUTPUT FROM THE WAVE ANALYZER.

Refer to Figure 28, page 5-4. Turn the ERASE HEAD WRAP adjustment screw until a minimum reading is found on the wave analyzer.

Refer to Figure 55, page 10-11. Trim C1 *(erase peaking)* for minimum reading on the wave analyzer.

ADJUST ALL CHANNELS IN THE SAME WAY.

METHOD 2 *If a wave analyzer is not available.*

RECORD SEVERAL MINUTES of 500 Hz tone at 0 VU level. RECORD on all channels. Remove the signal input. REWIND. Put the transport into RECORD mode with NO SIGNAL INPUT. Turn your monitors up to their highest level.

MAKE THE FOLLOWING ADJUSTMENTS WHILE LISTENING TO THE MONITORS.

Refer to Figure 28, page 5-4. Turn the ERASE HEAD WRAP adjustment screw until you hear a null in the 400 Hz tone coming from the monitors.

Refer to Figure 55, page 10-11. Trim C1 *(erase peaking)* for minimum 400 Hz tone coming from the monitors.

ADJUST ALL CHANNELS IN THE SAME WAY.

5.9.14 NOISE TESTS

Connect an AC voltmeter to the channel output with the following "weighting network" between the output and the meter:

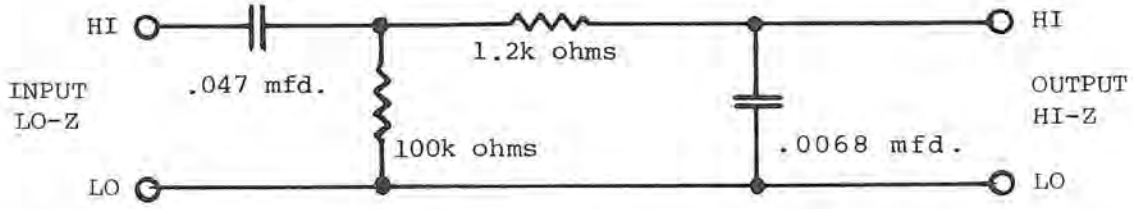

Figure 39

The network above will result in an attenuation of 3.0 dB at 30 Hz and at 18 kHz.

SET THE ELECTRONIC CONTROLS.

Press the REPRO button. Press the SAFE button.

SET THE TRANSPORT CONTROLS.

Load a roll of blank tape. Head shield MUST be in UP position. Put into STOP mode. THE NOISE READING SHOULD BE −66 dBm or lower.

RESET THE TRANSPORT CONTROLS.

Fixed reference. Choose 15 ips speed. Put into PLAY mode. THE NOISE READING SHOULD BE −64 dBm or lower.

RESET THE TRANSPORT CONTROLS.

Put the transport into RECORD mode with NO SIGNAL INPUT. After recording several minutes of "BIAS ONLY." REWIND the tape. PUT THE TRANSPORT INTO PLAY MODE. THE NOISE READING SHOULD BE -60 dBm or lower.

TEST ALL CHANNELS IN THE SAME WAY.

TROUBLESHOOTING

TROUBLESHOOTING

6.0 TROUBLESHOOTING

The troubleshooting section of this manual presents detailed, practical information which will be important to the repair technician who services this equipment.

Since the transport electronics constitute a sophisticated control system not found anywhere else, we have paid very special attention to these three circuit boards:

1. The Control Logic board.
2. The Analog Torque board.
3. The Phase Locked Loop board.

The reproduce, record, and bias circuits are more conventional and simpler troubleshooting procedures are adequate.

6.1 CONTROL LOGIC BOARD

To aid in the job of isolating trouble on this board, MCI has made available an optional troubleshooting aid—a LOGIC ANNUNCIATOR board.

NOTE:
In use, the Logic Annunciator board plugs directly into the Control Logic board. It may be left in this position during operation if desired.

In this section of the manual the following troubleshooting aids are provided:
1. A TRUTH TABLE of the Annunciator board for each control condition.
2. A key to the abbreviations used on the Annunciator board and the Truth Table.
3. A correlation between each IC and the functions it controls:
   A. A LIST of the malfunctions which occur if each IC is open.
   B. A TROUBLESHOOTING CHART using the Truth Table as a guide.

LOGIC ANNUNCIATOR BOARD *(An optional troubleshooting aid 25B177)*

Page 6-2 contains a KEY to the abbreviations used on the Annunciator board. These same abbreviations are used on the TRUTH TABLE found on page 6-2. The TRUTH TABLE shows which of the LEDs on the Annunciator board should be ON during each mode of operation.

The Logic Annunciator board and its Truth Table may be used to ISOLATE or LOCALIZE any trouble which occures on the Control Logic board. The Annunciator board is made to be plugged directly into the Control Logic board. To use this tool, STEP THROUGH THE LIST OF CONTROL MODES shown on the Truth Table. At each step, several LEDs will turn ON. Check the TRUTH TABLE to be sure that EACH light that should be ON is turned ON, and each light that should be OFF is turned OFF.

ANY circuit which corresponds to the Truth Table may be assumed to be working correctly, and any circuit which does NOT correspond to the Truth Table may be assumed to be malfunctioning.

JH-110 LOGIC ANNUNCIATOR DEFINITIONS

Al Enab ..... AutoLocator enable command
DMVC ..... Deck Manual Velocity Control (MVC) touched last'
RMVC ..... Remote Manual Velocity Control (MVC) touched last'
MVC ..... Main Manual Velocity Control (MVC) command
F.Fet ..... Fast FET command

Lifter ..... Tape lifter out command
Rw Cmd ..... Rewind command
Rw Lt ..... Rewind lite command
FF Cmd ..... Fast forward command
FF Lt ..... Fast forward lite command
Bks ..... Brake release command
Stop ..... Stop command
R.Idle ..... Right (takeup) motor idle command
PP Lt ..... Play preset lite command
P Lft ..... Play left (supply) motor command
P Rt ..... Play right (takeup) motor command
Rec ..... Record command
Rec Mom ..... Record momentary command
Edit ..... Edit command
Sh ..... Shield down command[2]
Sh Lt ..... Shield lite command[2]

NOTES *(These notes apply to both the Definitions and the Truth Table.)*

1. Only ONE of the pair (DMVC or RMVC) will be ON at all times to indicate the last control touched. If the optional REMOTE CONTROL has not been supplied with this machine, the DMVC light should always be ON.

2. The Shield Down command and the Shield Lite command do not apply to the JH-110A machine. These commands are functional ONLY for the JH-100 and the JH-114 transports. Either, or BOTH of these lights may turn ON or OFF without affecting the operation of this machine.

JH-110 LOGIC ANNUNCIATOR TRUTH TABLE

CONTROL MODE	AL ENAB	DMVC	RMVC	MVC	F. FET	LIFTER	RW CMD	RW LT	FF CMD	FF LT	BKS	STOP	R. IDLE	PPLT	P LFT	P RT	REC	REC MOM	EDIT	SH	SHLT	
REWIND	ON	See NOTE 1	See NOTE 1		ON	ON	ON	ON OFF			ON									See NOTE 2	See NOTE 2	1
FORWARD	ON				ON	ON			ON	ON	ON											2
STOP	ON										ON	ON	ON									3
PLAY	ON										ON			ON	ON	ON						4
RECORD	ON										ON			ON	ON	ON	ON					5
RECORD MOMENTARY	ON										ON			ON	ON	ON	ON					6
EDIT											ON		ON		ON			ON OFF	ON			7
MVC TOUCHED				ON	ON						ON											8
MVC LATCHED	ON			ON	ON	ON					ON											9
AUTOLOCATOR	ON				ON	ON		ON		ON												10
NO TAPE																						11
MANUAL LIFTER OUT																						12
	A	B	C	D	E	F	G	H	I	J	K	L	M	N	O	P	Q	R	S	T	U	

CORRELATION IF ICs AND THEIR FUNCTIONS

The interconnecting of the logic chips used in the Control Logic board makes it impossible to ascribe a single function to an IC, or conversely to ascribe a single IC to a function.

The following list is a generalization obtained by removing each IC in turn from its socket and observing the effects on the CONTROL FUNCTIONS. This list is to be used as a guide ONLY.

IC NO.	NOTES ON FUNCTIONS WHICH DO NOT OPERATE CORRECTLY WHEN THE IC IS REMOVED FROM ITS SOCKET.
1	RMVC-DMVC SELECTOR controls do not work.
2	REWIND function does not work.
3	FWD function does not work.
4	PLAY-RECORD functions do not work.
5	Transport will obey all control buttons except STOP.
6	RECORD function does not work.
7	Transport goes into EDIT mode instead of STOP.
8	MVC functions do not work.
9	RWD mode cannot be turned OFF.
10	FWD mode cannot be turned OFF.
11	Transport goes into PLAY mode with BRAKES ON *(reels STOP).*
12	Transport goes into PLAY mode with NO TAKEUP TENSION *(STOP button has been pushed).*
13	*(Controls shield functions not used on this machine.)*
14	*(Controls shield functions not used on this machine.)*
15	MVC does not turn OFF. PLAY and RECORD do not work.
16	TAPE LIFTER does not work. AUTOLOCATOR does not work. EDIT does not work.
17	EDIT does not work. TAPE LIFTER stays in OUT position.
18	MVC does not work. PLAY and RECORD do not work.
19	BRAKES remain ON. RWD and FWD lights both remain ON.
20	REEL TENSIONS are seriously wrong. STOP light will not come ON.
21	REEL TENSIONS are seriously wrong.

CONTROL LOGIC BOARD TROUBLESHOOTING PROCEDURE—USING THE LOGIC ANNUNCIATOR AND ITS TRUTH TABLE.

GENERAL INSTRUCTIONS:

Put the transport into each Control mode named on the Truth Table. From one to eight LEDs will light. Check that each light called for by the chart is ON, and that NO lights are ON EXCEPT those shown on the chart.

If any ON light is OFF, check its coordinates on the chart. *(See the bottom line and the column to the far right.)* The coordinates of the lights are used as the key to the table on the next page. This table identifies the schematic numbers of the ICs which may be involved in any malfunction. As a general rule, the IC numbers given first on the list are more likely to be causing the trouble.

SPECIAL NOTE:

In preparation of these lists, we assumed that the OUTPUTS of the TTL chips were the potential source of trouble. Therefore we did not include the IC numbers whose INPUTS ONLY have contact with the "information path." A SHORTED INPUT of some logic chip not on the list MAY cause a malfunction. However, TTL chips rarely develop "input circuit" trouble after their initial burn-in period.

When a malfunction is suspected, the Annunciator board should be used to check the ENTIRE TRUTH TABLE. Note which lights are wrong in EACH mode of operation. Spend a few minutes in cross-correlating the information gathered from the Truth Table and from the Troubleshooting Chart. By using this process to eliminate all but a very few of the ICs, you should be able to pinpoint the trouble very quickly.

LITE NO.	SCHEMATIC NO. OF ICs WHICH MAY CAUSE TROUBLE
A1	16, 8, 11, 4, 18, 12, 7, 6, 20, 17, 9, 2, 10, 3
A2	(Same as A1)
A3	(Same as A1)
A4	(Same as A1)
A5	(Same as A1)
A6	(Same as A1)
A9	(Same as A1)
A10	(Same as A1)
B1-B12	See NOTE 1 — Check IC 1
C1-C12	See NOTE 1 — Check IC 1
D8	8, 16, 15, 5, 18, 12, 20, 7, 17, 11, 4, 10, 3, 9, 2
D9	(Same as D8)
E1	17, 8, 9, 2, 5, 11, 4, 10, 3, 16, 15, 12, 20, 7, 6, 18
E2	(Same as E1)
E8	(Same as E1)
E9	(Same as E1)
E10	(Same as E1)
F1	17, 16, 9, 2, 10, 3, 18, 8, 15, 5, 12, 7, 6, 20
F2	
F9	(Same as F1)
F10	(Same as F1)
G1	9, 2, 5, 11, 4, 10, 3
H1	19, 9, 2, 5, 11, 4, 10, 3
H10	(Same as H1)
I2	10, 3, 5, 11, 4, 9, 2
J2	19, 10, 3, 5, 11, 4, 9, 2
K1	19, 5, 7, 6, 17, 16, 10, 3, 9, 2, 18, 8, 15, 12, 11, 4, 20
K2	(Same as K1)
K3	(Same as K1)
K4	(Same as K1)
K5	(Same as K1)
K6	(Same as K1)
K7	(Same as K1)
K8	(Same as K1)
K9	(Same as K1)
L3	5
M3	19, 20, 21, 18, 12, 17, 8, 15, 5, 7, 10, 3, 9, 2, 6, 16, 11, 4
M7	(Same as M3)
N4	11, 4, 5, 16, 8, 15, 10, 3, 9, 2
N5	(Same as N1)
N6	(Same as N1)
O4	12, 20, 7, 6, 11, 4, 16, 8, 15, 9, 2, 10, 3
O5	(Same as O4)
O6	(Same as O4)
O7	(Same as O4)
P4	18, 12, 20, 7, 6, 11, 4, 16, 8, 15, 5, 17, 9, 2, 10, 3
P5	(Same as P4)
P6	(Same as P4)
Q5	6, 5, 18, 12, 7, 11, 4, 16, 17, 8, 15, 9, 2, 10, 3
Q6	(Same as Q5)
R6	7, 6, 5, 18, 12, 20, 11, 4, 16, 8, 17, 15, 9, 2, 10, 3
S7	7, 6, 17, 16, 9, 2, 18, 8, 15, 5, 12, 10, 3, 11, 4

6.2 ANALOG TORQUE BOARD

This board controls the torque generated in the two reel motors. A functional description and a Block Diagram are included in Section 2.0 of this manual. Periodic adjustments are described in Section 5.0, and a complete schematic may be found in Section 10.0

The outputs of the Analog Torque board go to the POWER SUPPLY board where the MOTOR DRIVER circuits are located. Troubleshooting information on the Power Supply board may be found in Section 6.3, page 6-7.

The troubleshooting aids for this board are divided into (1) a Quick Reference Chart, (2) a Voltage Chart, and (3) a Loss of Function Chart.

QUICK REFERENCE CHART

PROBLEM	POSSIBLE CURE
Tape does not move in PLAY mode.	Check and/or replace IC 13, IC 14.
Reel motors do not idle correctly. No takeup tension (tape spills). Idling speed much too high in either direction.	Check and/or replace supply reel-IC 4, IC 5. Takeup reel-IC 10, IC 11.
PLAY TENSION WRONG. Tape spills in PLAY mode. No supply reel tension in PLAY mode.	Check and/or replace IC 3, IC 6, IC 7. Also check tape speed signal from Phase Lock Loop board.
FWD mode does not work, or FWD speed is very slow.	Check and/or replace IC 18, IC 19.
RWD mode does not work, or RWD speed is very slow.	Check and/or replace IC 18, IC 19.
Tape tensions do not vary with mode change.	Check tape velocity integrator output from Phase Lock board to Analog board at 15 ips it should read approx. 3.3v DC.

LOSS OF FUNCTION CHART

GENERAL INSTRUCTIONS:

The following chart is arranged with the most significant functions at the LEFT and the least significant functions on the RIGHT. If you observe more than one function to be missing (OR ALWAYS "ON"), investigate FIRST the function listed to the LEFT.

Operate the machine in all modes and match the malfunctions to the chart. CHECK or REPLACE the components listed in that section of the chart.

HINT:
The two torque motor systems have many identical components. Thus components that are suspect can be changed from side to side to help in locating the trouble. It is best NOT to change TRIM POT adjustments until you have substituted KNOWN GOOD components in the affected circuit.

NOTE:

1. Trim pots R12 & R36 are used to set the OFF-SET NULL to minimum voltage. *(Never more than ±0.3v DC).*

   Trim post R18 & R111 are used to set the IDLE adjustment. TAPE CREEP is a sign of misadjustment.

   For ADJUSTMENT PROCEDURE see the maintenance section of this manual. THIS ADJUSTMENT MUST BE CORRECT BEFORE PROCEEDING TO OTHER COLUMNS OF THIS CHART.

2. SOFT EDIT is checked with tape loaded on the machine in STOP mode. FORCE the SUPPLY reel and the TAKEUP reel in the REVERSE direction *(opposite to their torque).* Note that the motors do not FIGHT your efforts, but merely wind up the slack tape.

3. A signal voltage proportional to the speed of the capstan is received from the PHASE LOCK LOOP board. This signal is used as the divisor in the computation of the TORQUE. If this signal is missing, the computation is invalid—since we would be dividing by "0".

4. All components are located on the Analog Torque board EXCEPT those identified by reference to NOTE 4.

   The MOTOR DRIVER AMPLIFIERS are located on the POWER SUPPLY board. Refer to Section 6.3, page 6-7.

LOSS OF FUNCTION CHART

	All Commands	Fast Modes	MVC	Auto Locate	Stop *(Idle)*	Soft Edit *(Note 2)*	Play Accel. Command	Play Tension Problems	Torque Limit Function	Capstan Problems *(Note 3)*
SUPPLY MOTOR	Power Supply & Motor Drive board Note 4 IC 28	IC 15 IC 16 IC 18 IC 19 IC 28			IC 4 IC 5 IC 15 IC 16 Note 1 R12 R18			IC 1 IC 2 IC 3 IC 15 IC 16 Note 1 R8		
BOTH MOTORS	+15v -15 +34v	+15v -15 IC 20 IC21	IC 18 IC 19	IC 13 IC 14 IC 16 IC 17		IC 13 IC 14 IC 29 Q2	IC 22 IC 23	IC 6 IC 13 IC 14	Q1	PLL bd. IC 9 IC 10 Q2 Note 4 IC 6
TAKEUP MOTOR	Power Supply & motor drive board Note 4 IC 26 IC 27	IC 18 IC 19 IC 24 IC 25 IC 26 IC 27			IC 10 IC 11 IC 24 IC 25 Note 1 R36 R111			IC 7 IC 8 IC 9 IC 12 IC 24 IC 25 Note 1 R41		

6.3 POWER SUPPLY AND MOTOR DRIVER BOARD

The unregulated supply voltages *(8v DC and 35v DC)* are generated by a conventional full wave rectifier. Low voltages in these circuits is usually caused by EXCESSIVE load, or by an OPEN filter capacitor.

The ±24v DC *(tol. +0v,* −2v DC) and the ±15v DC *(tol. ±.75v DC)* are regulated supplies. NOTE that these supplies are in "SERIES"—the ±15v supply depends on the ±24v supply. Therefore, if there is trouble in the +24v supply, the +15v supply will likely be off reading also.

The ±24v supplies in turn depend on the ±33v unregulated supply. These supplies have conventional full wave rectifier circuits.

When looking for trouble in these circuits, check all of the voltages in the three levels—then attempt to correct the HIGHEST voltage which gives a bad reading.

MOTOR DRIVER BOARD

This board contains the drivers for the SUPPLY reel motor, the TAKEUP reel motor, and the regulator circuit which supplies power for the LAMPS, the RELAYS, and the CAPSTAN MOTOR.

The simplified schematic below shows how the reel motors are controlled. The chart on the following page shows the voltages present when the TEST conditions are set up.

TEST CONDITIONS:
Load a 10½ in. roll of tape. Push the TEST button on the Analog Torque board. Set TP 3 to +1.5v DC by turning R8. *(See board layout, Figure 58, page 10-17.)* Set TP 4 to +1.5v DC by turning R41.

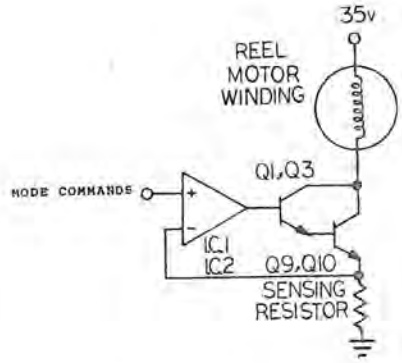

Figure 40

This is a constant current amplifier which maintains a fixed current through the motor winding, regardless of the winding resistance or the speed of the motor. The mode command signals fed to the non-inverting input of the op-amp control the AMOUNT of current to be fed to the motor.

Since the purpose of the circuit is to deliver a constant CURRENT to the motor winding, the voltage present at the negative end of the winding *(and at the collectors of Q1, 3, 9, 10)* will vary widely. Other voltages vary only slightly in a circuit which is working normally:

Q1, Q3 —	Base	≈1.7v DC
	Emitter	≈ .7v DC
Q9, Q10 —	Base	≈ .7v DC
	Emitter	≈ .1v DC

Voltages at the collectors of the above transistors will vary widely.

IC 1, IC 2 — Set inputs to +1.5v DC *(read at input to card)*
Pin 3 ≈ + .1v DC
Pin 6 ≈ +1.2v DC

LAMP, RELAY, AND CAPSTAN MOTOR SUPPLY

The three transistors in this section provide a regulated output for the above circuits.

Q5 is the Series Regulator.	Collector	≈ 35v DC
	Base	≈ 24v DC
	Emitter	≈ 23.4v DC

Q7 and Q8 are Shunt type current limiters. These transistors are turned OFF unless there is excess current.

BE SURE TO RESET THE ANALOG TORQUE BOARD ADJUSTMENTS BEFORE ATTEMPTING TO OPERATE THE MACHINE. *(See Section 5.6, page 5-11.)*

6.4 PHASE LOCKED LOOP BOARD

This board controls the capstan motor. Therefore, any problems with the TAPE SPEED in PLAY or RECORD modes are likely to be located on this board.

We have divided the troubleshooting information on this circuit into (1) a Quick Reference chart, and (2) a chart of the Wave Forms found on the board. If the Quick Reference chart does not solve your problem, it will be necessary to troubleshoot this circuit with an oscilloscope, using the Wave Form chart.

QUICK REFERENCE CHART

PROBLEM	POSSIBLE CURE
If the capstan motor continues to run in STOP mode.	Replace IC 13.
If the capstan motor runs away when in PLAY mode.	A. Check for broken wires on CAPSTAN TACH photocells. B. Replace IC 1 on TACH board. C. Check tach connection to Phase Locked Loop board.
If the capstan motor has a very sluggish start-up.	Replace IC 15, it may be oscillating.
If the capstan motor works normally in FIXED REFERENCE mode, but will not work in VARIABLE mode.	Check and/or replace IC 4, IC 5.
If the capstan motor works normally in VARIABLE mode but will not work in FIXED REFERENCE mode.	Check and/or replace IC 1, IC 2, IC 3.
If the capstan motor works properly in HIGH SPEED but not in LOW SPEED.	Check and/or replace IC 6.
If the capstan motor does not run.	Check and/or replace IC nos. 7, 8, 11, 12, 13, 14 and Q3, Q4.
If the capstan motor runs with an uneven or "jerky" motion.	Adjust the Phase Locked Loop gain control.

If the capstan motor does not operate in VAR reference position.	Check and/or replace IC 16 *(switching ckt.)*, IC 5 *(VCO)*, and IC 4 *(DC buffer)*.
If the capstan motor does not follow an External signal when in EXT reference position.	Check and/or replace IC 16 *(switching ckt.)*, and IC 18 *(retriggerable one-shot)*.

This circuit is a CLOSED LOOP AMPLIFIER, and each signal wave form and voltage depends on the previous signal—ALL THE WAY AROUND THE CIRCLE. Therefore it is difficult to isolate the point where the trouble starts. Your oscilloscope MUST be capable of measuring the duration and the amplitude of the pulses with reasonable accuracy.

BEFORE STARTING THE WAVE FORM ANALYSIS, CHECK THE SUPPLY VOLTAGES:

± 5v DC across CR7, CR8
+22v DC at P47 Pin 9, 10
±15v DC at P45 Pin 1, 2, to gnd.

WAVE FORM CHART

Test conditions: Fixed reference, 15 ips, PLAY mode.

TEST POINT	PULS DESCRIPTION			PEAK TO-PEAK VOLTAGE
	+	−	DURATION	
IC 1, Pin 6	Triangular	Triangular	10 μSec.	4
IC 6, Pin 6	5 μSec.	5 μSec.	10 μSec.	7.5
TP 2	10 μSec.	40 μSec.	50 μSec.	4
IC 3, Pin 12	50 μSec.	50 μSec.	100 μSec.	4
IC 6, Pin 1	10 μSec.	40 μSec.	50 μSec.	4
IC 6, Pin 6	50 μSec.	50 μSec.	100 μSec.	4
IC 6, Pin 7	100 μSec.	100 μSec.	200 μSec.	4
IC 15, Pin 3	10 μSec.	90 μSec.	100 μSec.	4
TP 2	10 μSec.	90 μSec.	100 μSec.	6
IC 8, Pin 8	*.2 μSec.	99.8μSec.	100 μSec.	4
IC 8, Pin 9	*.2 μSec.	99.8μSec.	100 μSec.	4
TP 3 *(Adj. R42 for)*	30 μSec.	70 μSec.	100 μSec.	4
IC 12, Pin 6	30 μSec.	70 μSec.	100 μSec.	4

* *These pulses will be visible ONLY on a high speed scope (30mHz or better).*

6.4.1 FREQUENCY STRAPPING ON THE PLL BOARD

Two jumpers are used for adjusting the number of flip-flops being used to divide the reference signal frequency. Selection of the correct jumper position depends on the speed of the machine. One additional flip-flop is used for all SLOW SPEED machines. Refer to notes 9 and 10 on the PLL board schematic for details *(Figure 57, page 10-15)*.

6.4.2 EXTERNAL REFERENCE SIGNAL SWITCH

An FET located on J85 allows the use of either a 0-5v DC external control signal or a 19.2 kHz external control signal. J85 is the "SERVO" jack on the rear of the transport electronics chassis. The control voltage for this FET is +15 volts applied to Pin 3 *(Pin 2 may be used as a +15v source).*

When +15v is applied to Pin 3, the 19.2 kHz external signal applied to Pin 7 will control the speed of the machine.

When Pin 3 is allowed to return to its normal −15v, the DC control voltage applied to Pin 6 *(0-5v)* controls the internal VCO on the PLL board.

6.5 AUDIO ELECTRONICS

Each channel has a mother board and three plug-in boards which are identical and interchangeable. The schematics for these boards have both DC and SIGNAL voltage notations at important points.

The first step in ISOLATING trouble within a channel should be to substitute plug-in boards from a WORKING channel or from your SPARE PARTS KIT. This should verify your analysis of WHERE the trouble is located.

Standard "PROGRESSIVE ISOLATION" procedures, using the information available on the schematics, should easily locate the defective component.

NOTE:
The P1086E transistors used on all three of these boards are depletion model "P" channel Field Effect Transistors. They are used as SWITCHES and take the place of the many small relays used in other professional machines.

The Field Effect Transistors used on the BIAS CARD are carefully selected for an exact pinch-off voltage. Punch in/punch out performance of the machine is directly affected by the pinch-off voltage of these FETs. If replacements are needed, secure them from MCI Customer Service.

These FETs are turned OFF by a +18v DC control voltage. They turn ON when the control voltage goes to 0v.

THE AUDIO FLOW CHARTS *(Figure 10 page 3-3 and Figure 11, page 3-5)* WILL PROVE VERY HELPFUL. THEY SHOW THE LOCATION OF EACH FUNCTION AND HELP TO TIE ALL OF THE SCHEMATICS TOGETHER.

6.6 RETURN-TO-ZERO OPTION

BEFORE ATTEMPTING TO TROUBLESHOOT THIS CIRCUIT, THE FOLLOWING SECTIONS SHOULD BE THOROUGHLY STUDIED.

A. Section 3.5 Return To Zero Locator *(theory of operation)*, page 3-34.
B. RTZ Locator Block Diagram, page 3-33.
C. Section 4.4 Return To Zero Locator Option *(instruction on use)*, page 4-7.
D. RTZ Locator Schematic, page 10-37.

QUICK REFERENCE CHART

PROBLEM	POSSIBLE CURE
Tens of seconds digit does not count properly. It should count: 0123450123... UP, and and 0543210543... DOWN.	Check and/or replace IC 11, IC 1, IC 2, CR 10, CR 11, C 16, C 15
Display counts UP only or DOWN only regardless of tape direction.	IC 6, IC 9, IC 10
Counts improperly for tape speed.	Improper jumpers on the Process board. IC 5, IC 7.
Does not reset when changing speed.	IC 8.

ADDITIONAL SERVICING HINTS:

1. This option has three PC boards nested together under the display. The top two boards contain all of the functions EXCEPT the Return-To-Zero.
   Therefore the top two boards can be used as a tape timer if it is necessary to remove the bottom board, UNPLUG the supply cables, PULL STRAIGHT DOWNWARD to remove the RTZ board and reinstall the four pin molex plug and the five pin molex plug in the same positions on the Process board. Leave the nine pin molex plug hanging. The tape timer should work normally. This configuration is necessary when repairing the Process board and the Display board.

2. A pair of contacts are provided on the Display board *(marked "Test pads" on the schematic)* for a convenient over-all check of the board functions. When these points are shorted together, the display should read 88.88. These test points are located on the bottom right corner of the Display board as seen with the deck elevated. *(The Display board is the board next to the deck plate.)*

3. The Process board *(second from the deck plate)* controls:
   The speed select functions *(switched by signals from the transport speed select switch).*
   The countup/countdown functions *(switched by signals from the Analog Torque board).*
   Notations on DC signal voltages and their sources are given on the schematic.

4. Three jumpers must be installed at the "Speed Select" area of the Process board to match the speed of the machine:

SLOW SPEED MACHINE	STANDARD *(fast)* SPEED MACHINE
L = 3.75	L = 7.5
M = 7.5	M = 15
H = 15	H = 30

5. The Return-To-Zero board *(third from the deck plate)* contains the Digital-To-Analog converter which is used to detect the ZERO POINT. The speed of tape rewind is controlled by this board. Length and shape of the control voltage ramp is set by selecting one of the jumpers in the feedback circuit of IC2. Selection of this jumper should be determined by the SPEED of the machine *(slow speed or fast speed)* and by the maximum reel size *(10 inch or 14 inch).* If this jumper is in the wrong place, the machine will either overshoot or undershoot when returning to zero.

6. The curves on the following pages represent the average output from the Digital-to-Analog circuit. The charts show:
   The voltage reading at Pin 6 of IC2
   vs.
   The display count *(the PLAY TIME remaining on the tape)*

RETURN TO ZERO DIGITAL TO ANALOG CONVERTER
for JH-110A-14 *(14 inch reel size)*

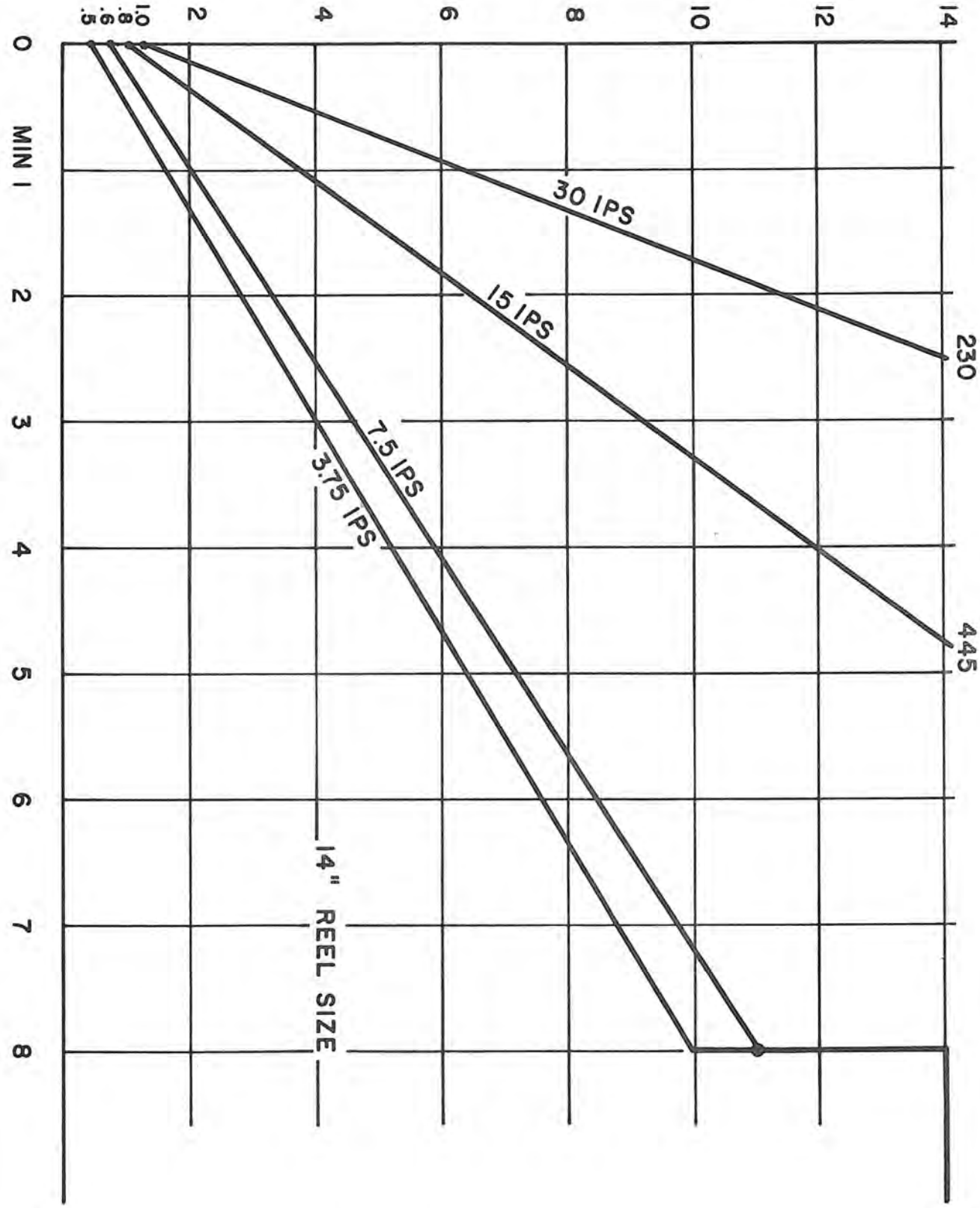

Figure 41

RETURN TO ZERO DIGITAL TO ANALOG CONVERTER
for JH-110A *(10½ inch reel size)*

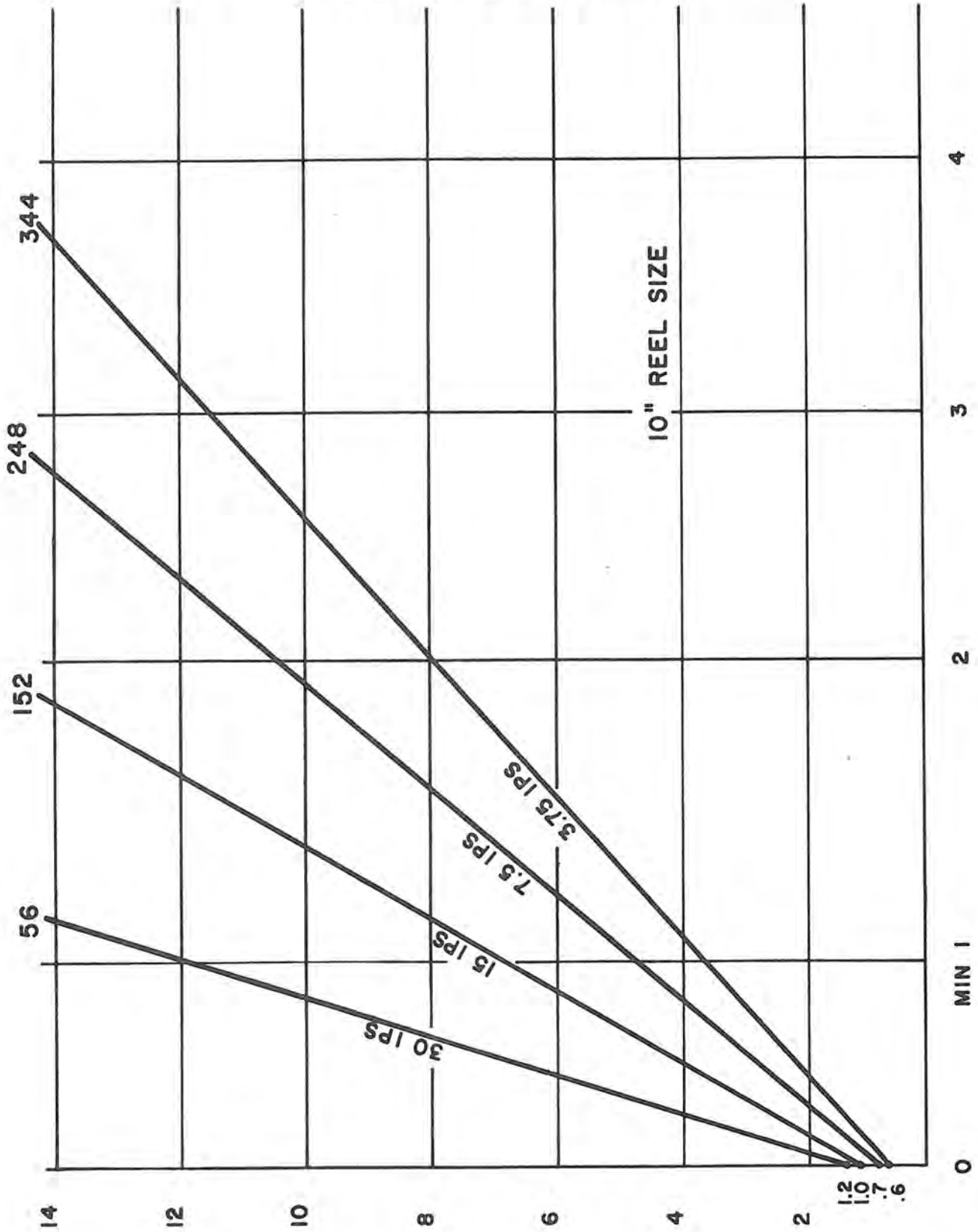

Figure 42

OPTIONS

OPTIONS

7.0 OPTIONAL ACCESSORIES

7.1 JH-110A REMOTE CONTROL

The REMOTE CONTROL unit provides full transport motion controls including the "Joystick." In addition it includes an LD *(Lifter Defeat)* button for controlling the tape lifter from the remote position. When the Return To Zero option is included with your machine, remote buttons are included to control this option.

The REMOTE CONTROL option is supplied in a separate case with a connecting cable 30 feet long. A photograph is included in this manual as Figure 9 on page 2-5. The schematic is also in this manual as Figure 67, page 10-35. The case dimensions are: width—11.5 inches; height—3.25 inches; depth—2.675 inches.

7.2 JH-36 RETURN TO ZERO

This option is built into the transport control panel. It is automatically corrected for the tape speed selected and reads in REAL TIME. The high speed REWIND is modified near ZERO so that there is no overshoot. The DIGITAL DISPLAY may be set to ZERO at any place on the tape.

The schematic of this option is included in this manual as Figure 68, page 10-37. Troubleshooting data is included in section 6.6.

7.3 AUTOLOCK *(Refer to AutoLock manual for detailed information.)*

The MCI AutoLock is designed to lock an MCI (JH-110A, JH-114) tape machine as a SLAVE to any other MCI (JH-110A, JH-114) tape machine as a MASTER. Locking of SLAVE to MASTER is by the use of SMPTE, EBU or NTSC (drop frame) time code. Accuracy of lock is within 50 microseconds.

The MCI AutoLock displays tape position MASTER or SLAVE in hours, minutes, seconds and frames. Manual control of positive or negative SLAVE OFFSET is provided from (1) frame to as many as needed. The AutoLock generates a TIME CODE. Tape discontinuities are overridden to provide free wheeling lock. Locking is by means of a fast lock or slo lock. Fast lock of SLAVE to MASTER is initially FAST WIND to 25% of nominal speed, capstan servo control to within 2 frames and absolute lock by comparing time code synchronizing detect pulses. SLO-LOCK maintains a maximum variation of 1.45% of nominal speed (¼ semitone maximum variation).

Other features are the capability of incorporating USER BITS into the TIME CODE. Storage of REC START and REC STOP tape position, when AUTO RECORD is pushed, causes recording start at a preset time to the time matching storage of record stop.

An additional capability is PARK of the SLAVE machine. A time position can be stored in the display. Pressing the PARK causes the SLAVE tape machine to run up to the display position and STOP.

NOTE:
The use of MCI AutoLock requires the addition of Interface Cable P/N WD2600-0102-00. The Interface cable consists of a 12 pin female Beau Connector which is cabled to a "RTZ plug-on" board which mounts directly on the Return To Zero package located underneath the TAPE DECK. The RTZ plug-on board contains a MASTER/SLAVE switch.

For specific details see the MCI AutoLock manual.

SPECIFICATIONS

SPECIFICATIONS

8.0 SYSTEM SPECIFICATIONS

FREQUENCY RESPONSE

RECORD/REPRODUCE

30 ips, AES	50 Hz - 22 kHz	+ 1/− 2 dB
15 ips, NAB	30 Hz - 20 kHz	+.75/−1.5 dB
7.5 ips, NAB	30 Hz - 18 kHz	+.75/−1.5 dB
3.75 ips, NAB	30 Hz - 10 kHz	+.75/−1.5 dB

SIGNAL-TO-NOISE

Record/Reproduce, reference to 510 nWb/m

UNWEIGHTED, 20 Hz - 20 kHz

	mono	2TK	4/8TK
30 ips, AES	68	64	64
15 ips, NAB	68	64	64
7.5 ips, NAB	67	63	63
3.75 ips, NAB	64	60	60

WEIGHTED, dB(A)

30 ips, AES	74	71	70
15 ips, NAB	70	68	68
7.5 ips, NAB	70	67	67
3.75 ips, NAB	67	64	64

DISTORTION

INTERMODULATION (70/7000 Hz, 4:1 ratio, 15 ips, NAB)

at 350 nWb/m <0.8%

HARMONIC, 510 nWb/m, 1 kHz fundamental

3rd harmonic:	30 ips, AES	<.35%
	15 ips, NAB	<.52%
	7.5 ips, NAB	<1.6%
	3.75 ips, NAB	< 6%
2nd harmonic:	30 ips, AES	<.10%
	15 ips, NAB	<.10%
	7.5 ips, NAB	<.10%
	3.75 ips, NAB	<.20%
3% 3rd harmonic, fluxivity level:	30 ips, AES	1040 nWb/m
	15 ips, NAB	1020 nWb/m
	7.5 ips, NAB	1000 nWb/m
	3.75 ips, NAB	770 nWb/m

BIAS and ERASE FREQUENCY

120 kHz

Specifications subject to change as innovative advancements in technology are incorporated.

DEPTH of ERASURE

At 1 kHz better than 80 dB

AMPLIFIER ELECTRONICS

Input impedance	10k ohms balanced
Output impedance	50 ohms balanced
Output clipping	+24 dBm

TRANSPORT

SPEEDS

Fixed	7.5, 15 and 30 ips 3.75, 7.5 and 15 ips optional
Variable	±20% around fixed speeds

CONFIGURATIONS

¼ inch	Full track
¼ inch	2 track
½ inch	4 track
1 inch	8 track

REEL SIZES

available with NAB A (3, 5 or 7 inch), NAB B (10½ or 14 inch), DIN 1000m (11½ inch) on various models

TENSION

5½ oz. ±¼ at all play speeds, beginning to end of reel

LONG TERM SPEED STABILITY

better than .02%

WOW/FLUTTER

30 ips	< .022% DIN 45507 weighted
15 ips	<.035% DIN 45507 weighted
7.5 ips	<.055% DIN 45507 weighted
3.75 ips	<.100% DIN 45507 weighted

START TIME

to 0.1% DIN 45507 flutter, 10½" reels

30 ips	900 msec
15 ips	500 msec
7.5 ips	500 msec
3.75 ips	400 msec

REWIND TIME

2400 ft.	85 seconds
4800 ft.	140 seconds

Specifications subject to change as innovative advancements in technology are incorporated.

8.1 DIMENSIONS AND WEIGHT

8.1.1 VARIABLE PROFILE CABINET

	Straight position	Tilted position
Height	27 in. 94 cm.	43½ in. 110.5 cm
Width	25¼ in. 64 cm.	25¼ in. 64 cm.
Depth	24 29/32 in. 63.25 cm.	24 29/32 in. 63.25 cm.

System Weight 180 lbs.
81.8 kgm.

Shipping Weight 210 lbs.
95.5kgm.

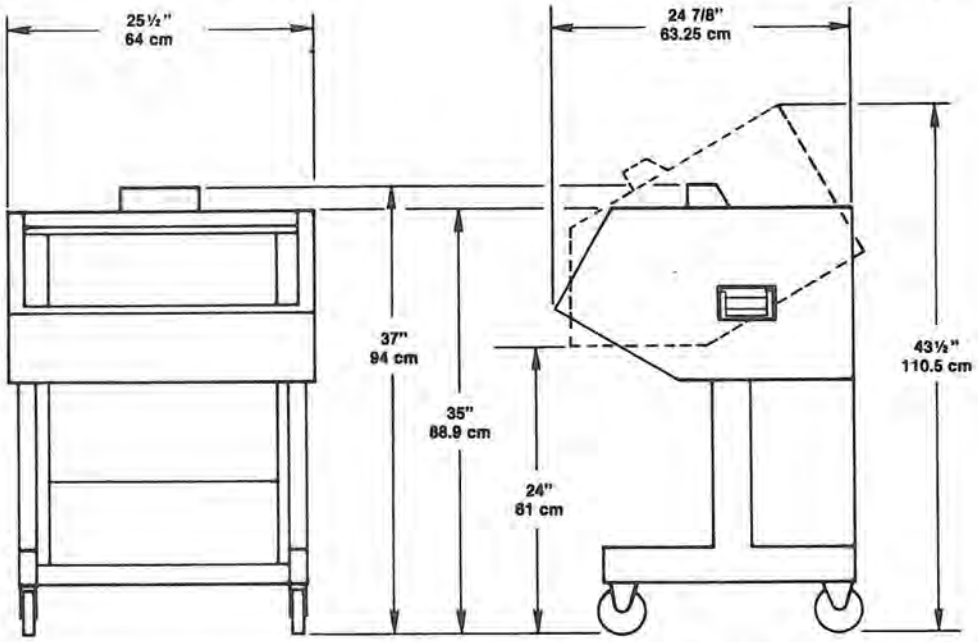

TRANSPORT UNMOUNTED

Height	13.5 in. 34.29 cm.
Width	22.5 in. 57.15 cm.
Depth	18.5 in. 46.99 cm.
Weight	38 lbs. 17.3 kgm.

ELECTRONIC DRAWER

Height	3.5 in. 8.89 cm.
Width	17.75 in. 45.09 cm.
Depth	12.125 in. 30.80 cm.
Weight single channel	19 lbs. 8.64 kgm.
Weight dual channel	23 lbs. 10.5 kgm.

Specifications subject to change as innovative advancements in technology are incorporated.

8.1.2 OVERHEAD BRIDGE CABINET

Height	54¼ in. 1378 mm.
Width	27¾ in. 705 mm.
Depth	29 in. 736.6 mm.
Cabinet Weight	126 lbs. 57.2 kgm.

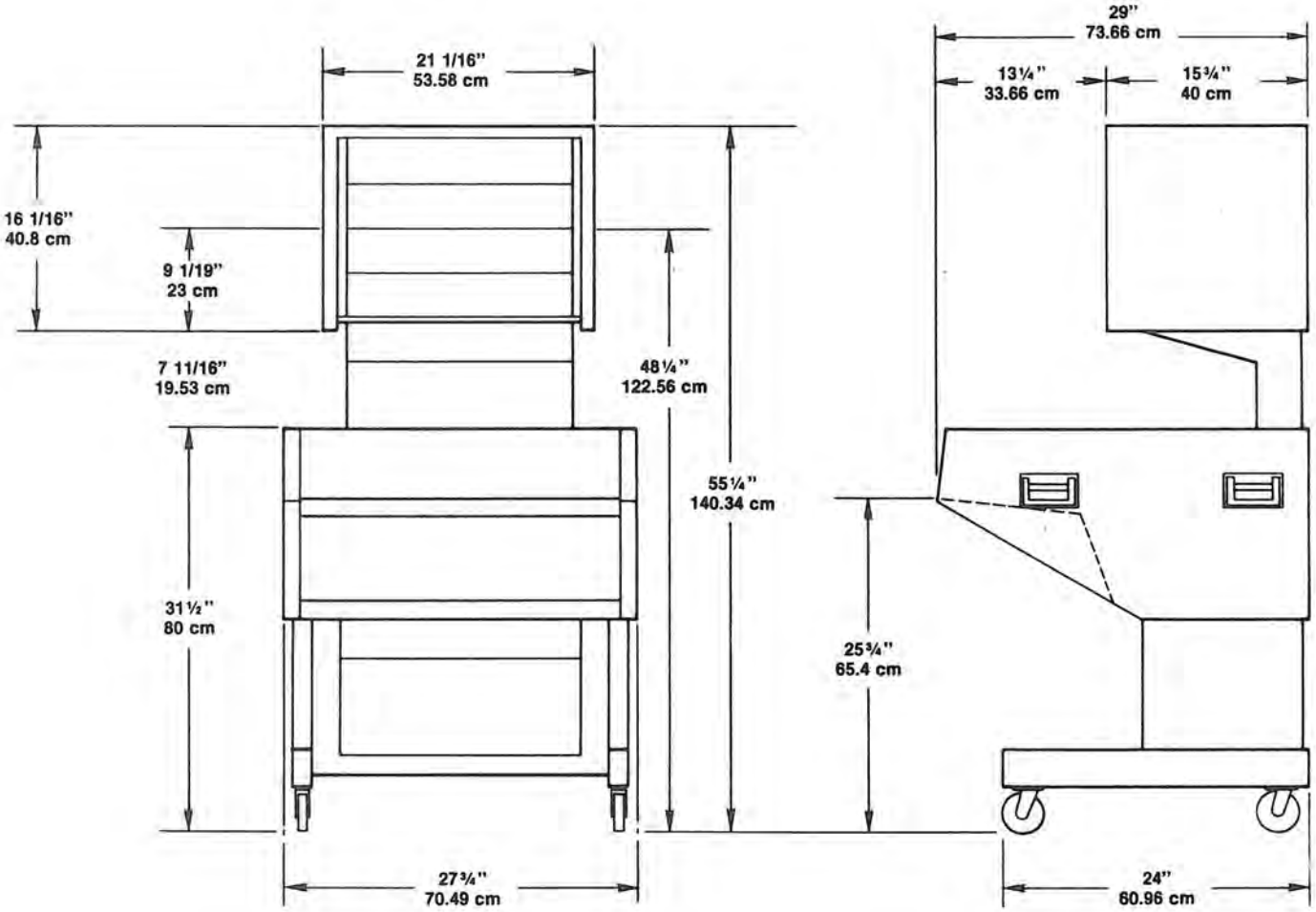

Specifications subject to change as innovative advancements in technology are incorporated.

WARRANTY

WARRANTY

MCI PROFESSIONAL RECORDING EQUIPMENT

ONE YEAR WARRANTY

This warranty is effective when the warranty registration card is properly completed and returned to MCI Inc. within ten (10) days after delivery.

MCI Inc. warrants to the Original Using Purchaser that MCI Professional Recording Equipment shall be free from defects in workmanship or materials for a period of One Year from date of first delivery to the Original Using Purchaser and agrees to repair or replace at MCI's option all parts showing such defects subject to all the following provisions:

> For the period of the One Year Warranty, MCI Inc. will repair or replace all defective parts at no charge for materials. After the first 90 days from date of delivery to the Original Using Purchaser labor incident to the repair or replacement will be charged at standard Dealer rates. Travel expenses from the Dealer's Service Center to the installation site are excluded from this Warranty.
>
> All Warranty transactions must be effected through the MCI Dealer from which the Original Using Purchaser obtained the MCI Professional Recording Equipment. MCI Inc. responsibility under this Warranty is limited to making replacement parts available to the dealer fob Fort Lauderdale, Florida.

This warranty is express and exclusive. There are no warranties, expressed or implied INCLUDING ANY WARRANTY OF MERCHANTABILITY beyond those stated herein. This warranty does not apply to equipment that has been altered or repaired by other than MCI Inc. approved procedures, and/or personnel, or has been subject to negligence, misuse, improper adjustments, or accident. No person, including any dealer, agent or representative of MCI Inc. is authorized to assume for MCI Inc. any liability except to refer purchaser to this warranty. In no event shall MCI Inc. be liable for any loss or damage, direct or consequential arising out of the use of, or inability to use any MCI Professional Recording Equipment.

The provisions of this warranty are severable. If any provision shall be deemed invalid the remaining provisions shall remain in full force and effect.

All firmware operational enhancements released by MCI Inc. within 60 days after first delivery of the equipment will be provided to the Original Using Purchaser free of charge fob MCI Inc., Fort Lauderdale, Florida.

Firmware enhancements released after the above 60 day period will be made available for sale to applicable equipment users through the MCI Dealer from which your equipment was purchased.

MCI Inc., 4007 NE 6th Avenue, Fort Lauderdale, Florida 33334 USA

MCI

SCHEMATICS

SCHEMATICS

INDEX OF SCHEMATICS

Figure	*Title*	*Drawing No.*	*Page*
51	Record Board	27D14	10-3
52	Reproduce Board	27D16	10-5
53	Bias & Erase Board	27D55	10-7
54	Strip Board with Oscillator	27D5	10-9
55	Audio Mother Board	27E17	10-11
56	Capstan Tach Board	25B287	10-13
57	Phase Locked Loop Board	25E600	10-15
58	Analog Torque Board	26D1	10-17
59	Control Logic Board	25D27	10-19
60	Solenoid Driver Board	25B42	10-21
61A	Interface/Lamp Driver Board	25D204 page 1 of 2	10-23A
61B	Interface/Lamp Driver Board	25D204 page 2 of 2	10-23B
62	Transport Mother Board	25D85	10-25
63	Power Supply	26D27	10-27
64	Head Housing & Connector	26C3	10-29
65	Photo Sensor Amp Board	26B160	10-31
66	Remote MVC Board	26B162	10-33
67	Remote Box & Cable	26C150	10-35
68	Return To Zero Locator	26D100	10-37
69	Interface Cable for AutoLock to JH-110A—RTZ	26C102	10-39

INDEX OF ASSEMBLY DRAWINGS

81	Head Assembly Pictorial	26C238	10-41
82	Pinch Roller Assembly Pictorial	26D369	10-43
83	Lifter Assembly Pictorial	26D262	10-45
84	Dancer Arm Assembly Pictorial	26C382	10-47
85	Brake Assembly Pictorial	26D404	10-49
86	Shield Assembly Pictorial	26C303	10-51
87	Capstan Motor & Tach Assembly Pictorial	26D405	10-53

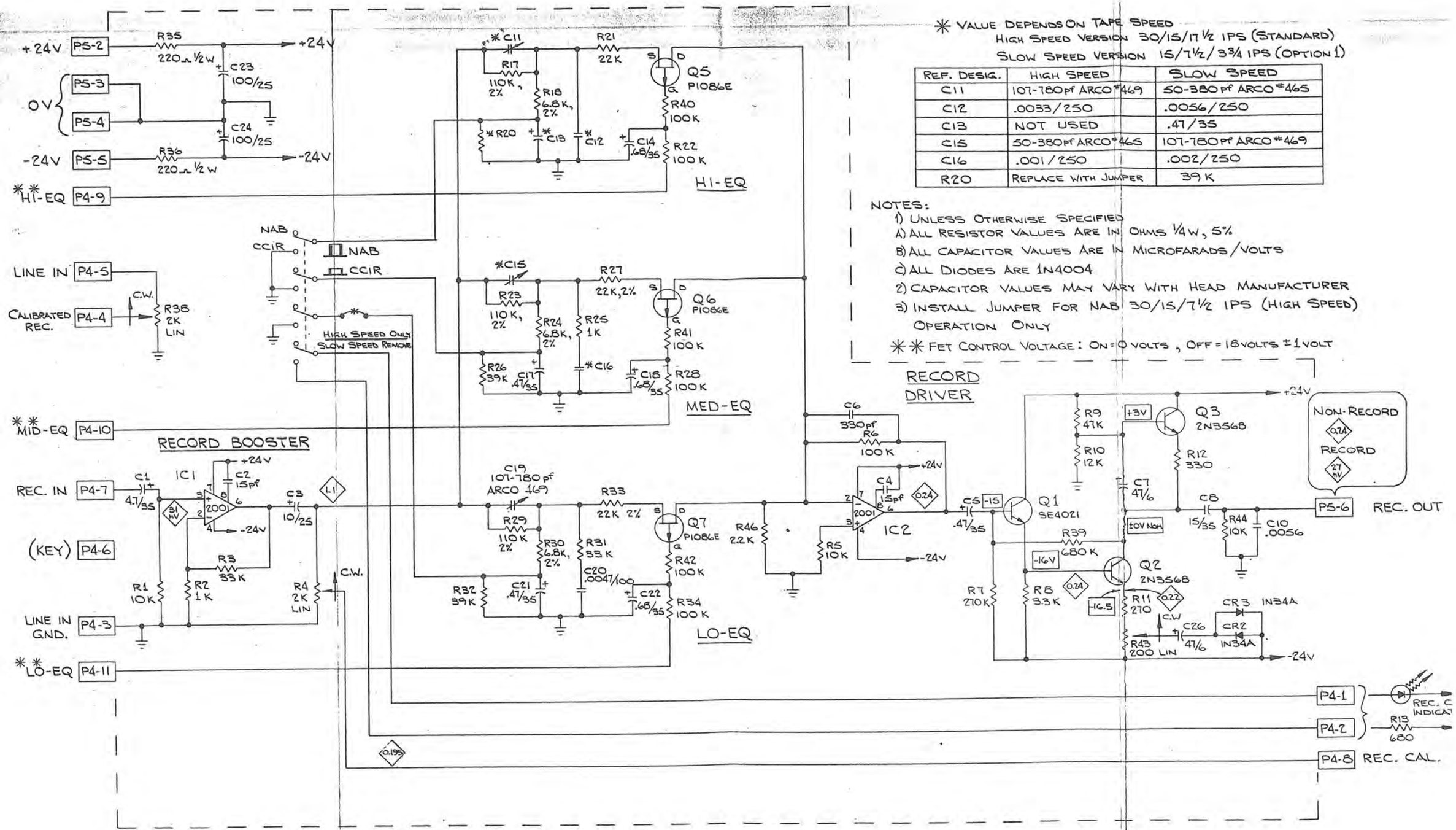

* VALUE DEPENDS ON TAPE SPEED
HIGH SPEED VERSION 30/15/17 1/2 IPS (STANDARD)
SLOW SPEED VERSION 15/7 1/2/3 3/4 IPS (OPTION 1)

REF. DESIG.	HIGH SPEED	SLOW SPEED
C11	107-780pf ARCO #469	50-380pf ARCO #465
C12	.0033/250	.0056/250
C13	NOT USED	.47/35
C15	50-380pf ARCO #465	107-780pf ARCO #469
C16	.001/250	.002/250
R20	REPLACE WITH JUMPER	39K

NOTES:
1) UNLESS OTHERWISE SPECIFIED
A) ALL RESISTOR VALUES ARE IN OHMS 1/4W, 5%
B) ALL CAPACITOR VALUES ARE IN MICROFARADS/VOLTS
C) ALL DIODES ARE 1N4004
2) CAPACITOR VALUES MAY VARY WITH HEAD MANUFACTURER
3) INSTALL JUMPER FOR NAB 30/15/7 1/2 IPS (HIGH SPEED) OPERATION ONLY
** FET CONTROL VOLTAGE: ON = 0 VOLTS, OFF = 18 VOLTS ± 1 VOLT

NOTES: CONT.
4) REFRENCE LEVEL IS +4dbm INTO A 600Ω LOAD FEEDING THE XLR INPUT
5) REFRENCE FREQUENCY IS 500 Hz FOR AC MEASUREMENTS.
6) ACV CAN NOT BE MEASURED AT PIN 2 OF 2001'S

VAC VDC

RECORD BOARD 27D14
Figure 51 JH-110A Page 10-3

SS27C14F

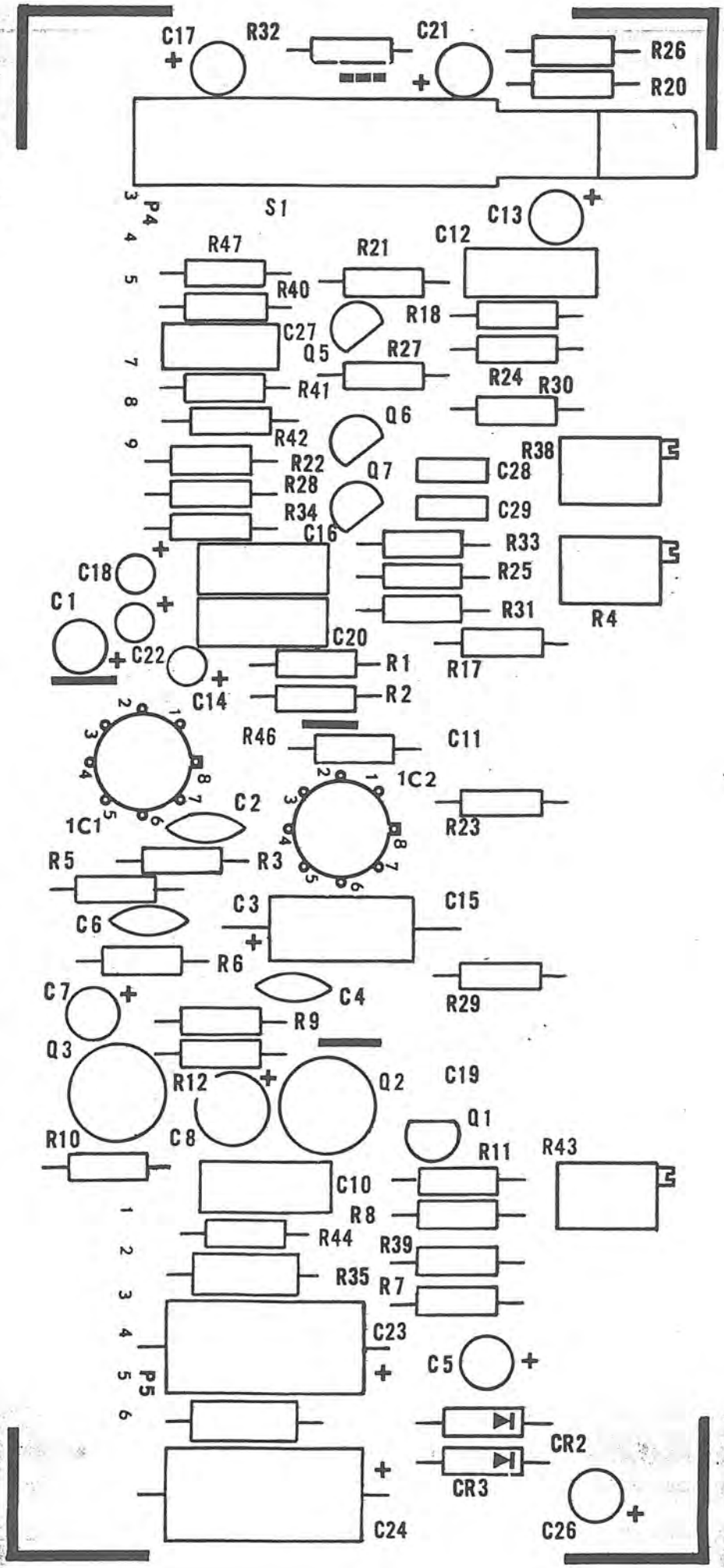
C17
R32
C21
R26
R20
S1
P4
C13
C12
R47
R21
R40
R18
C27
Q5
R27
R41
R24
R30
Q6
R42
R38
R22
Q7
C28
R28
C29
R34
C16
R33
C18
R25
C1
R31
R4
C20
C22
R1
R17
C14
R2
R46
C11
1C2
C2
1C1
R23
R5
R3
C3
C15
C6
R6
C7
C4
R29
R9
Q3
R12
Q2
C19
Q1
R10
C8
R11
R43
C10
R8
R44
R39
R35
R7
C23
C5
P5
CR2
CR3
C24
C26

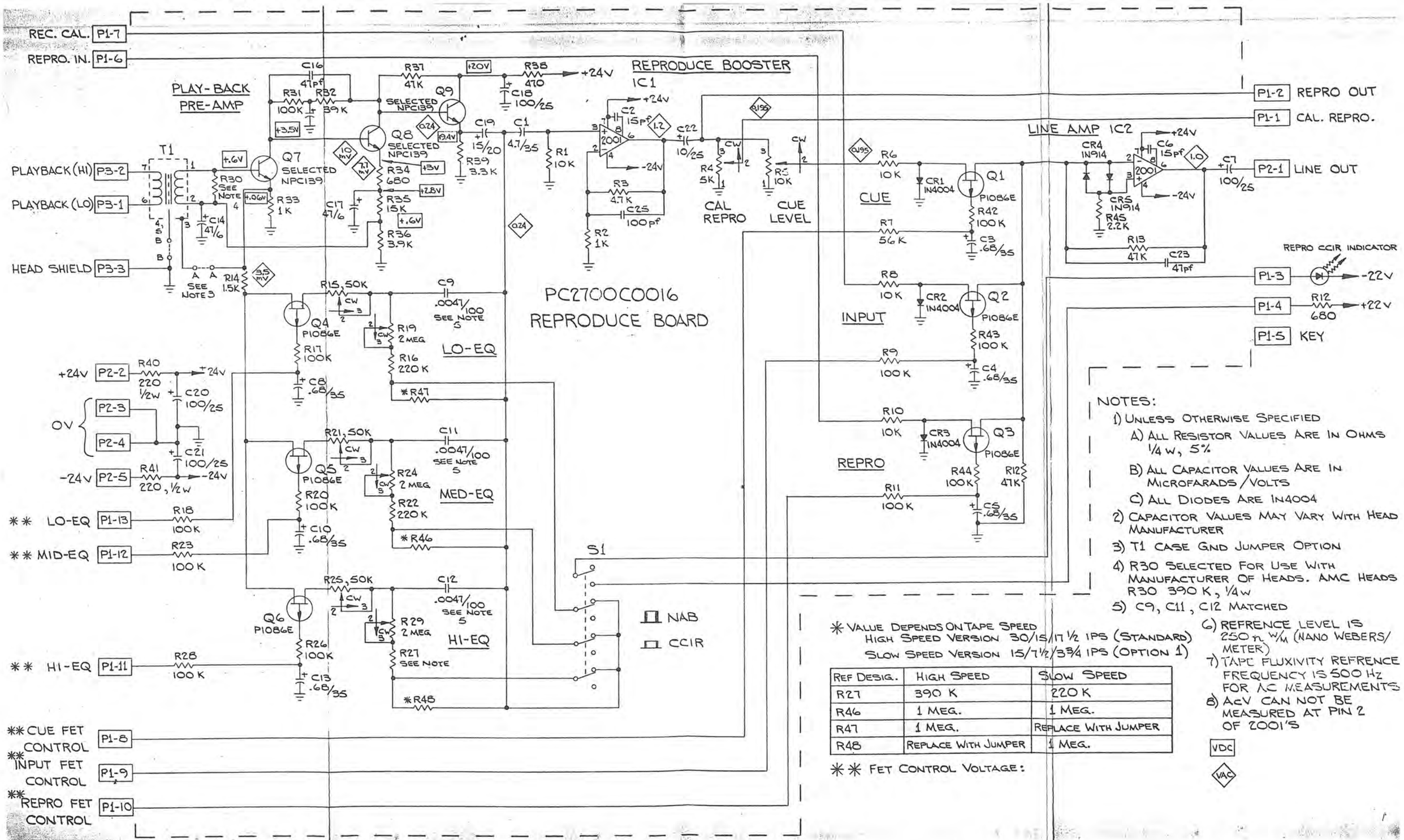

NOTES:

1) UNLESS OTHERWISE SPECIFIED
   A) ALL RESISTOR VALUES ARE IN OHMS 1/4 W, 5%
   B) ALL CAPACITOR VALUES ARE IN MICROFARADS/VOLTS
   C) ALL DIODES ARE 1N4004
2) CAPACITOR VALUES MAY VARY WITH HEAD MANUFACTURER
3) T1 CASE GND JUMPER OPTION
4) R30 SELECTED FOR USE WITH MANUFACTURER OF HEADS. AMC HEADS R30 390 K, 1/4 W
5) C9, C11, C12 MATCHED
6) REFRENCE LEVEL IS 250 n. W/M (NANO WEBERS/METER)
7) TAPE FLUXIVITY REFRENCE FREQUENCY IS 500 Hz FOR AC MEASUREMENTS
8) AcV CAN NOT BE MEASURED AT PIN 2 OF 2001'S

VDC

VAC

* VALUE DEPENDS ON TAPE SPEED
HIGH SPEED VERSION 30/15/17 1/2 IPS (STANDARD)
SLOW SPEED VERSION 15/7 1/2/3 3/4 IPS (OPTION 1)

REF DESIG.	HIGH SPEED	SLOW SPEED
R27	390 K	220 K
R46	1 MEG.	1 MEG.
R47	1 MEG.	REPLACE WITH JUMPER
R48	REPLACE WITH JUMPER	1 MEG.

** FET CONTROL VOLTAGE:

REPRODUCE BOARD 27D16

Figure 52 *JH-110A* *Page 10-5*

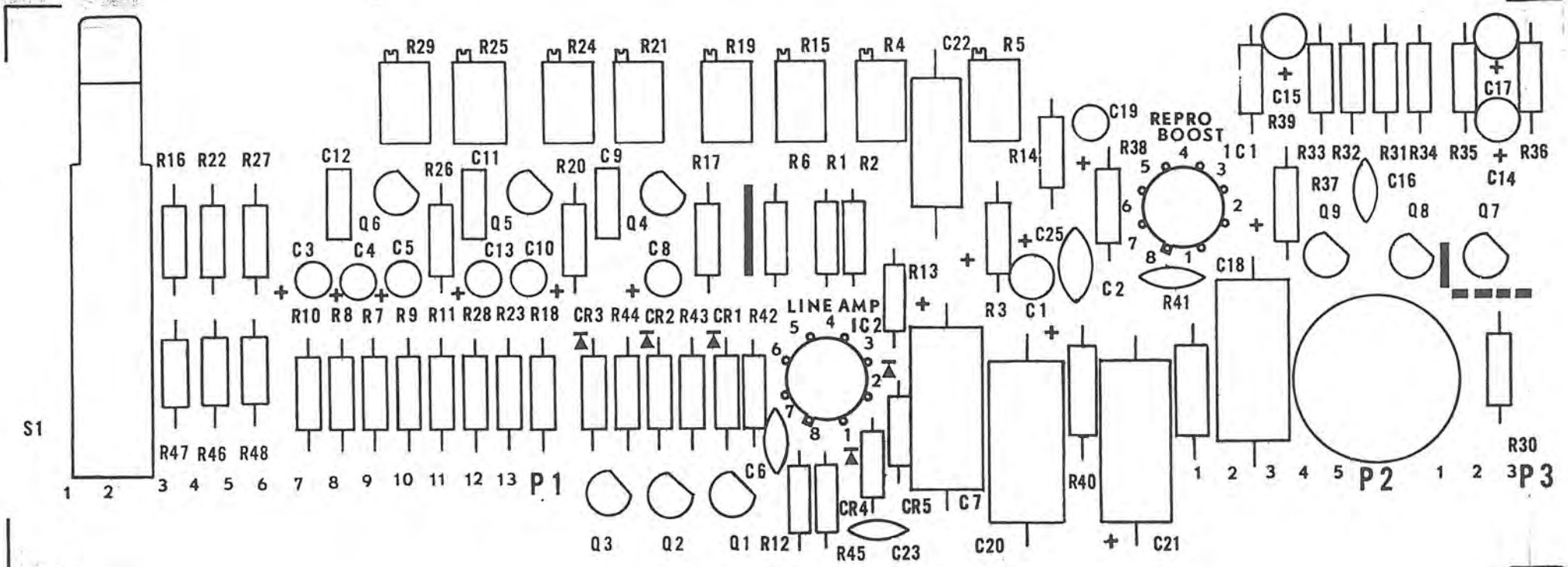
R29
R25
R24
R21
R19
R15
R4
C22
R5
C19
REPRO
BOOST
IC1
C15
R39
R33
R32
R31
R34
R35
C17
R36
C14
R16
R22
R27
C12
R26
C11
R20
C9
R17
R6
R1
R2
R14
R38
R37
C16
Q9
Q8
Q7
Q6
Q5
Q4
C3
C4
C5
C13
C10
C8
R13
C25
C2
R41
C18
R3
C1
R10
R8
R7
R9
R11
R28
R23
R18
CR3
R44
CR2
R43
CR1
R42
LINE AMP
IC2
S1
R47
R46
R48
C6
CR4
CR5
C7
R40
R30
P1
P2
P3
Q3
Q2
Q1
R12
R45
C23
C20
C21

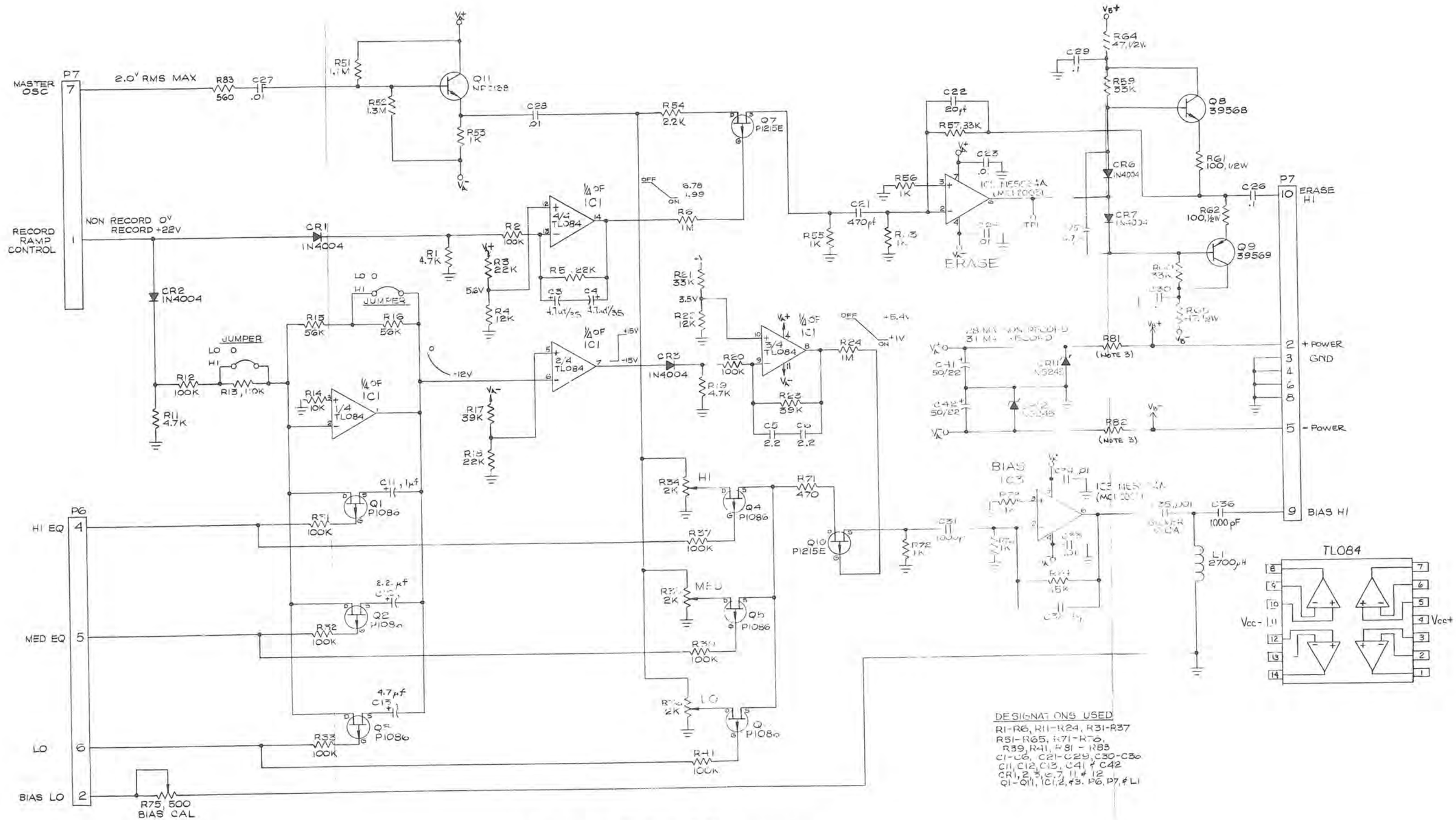

NOTES: UNLESS OTHERWISE NOTED
1—ALL RESISTORS VALUES ARE IN OHMS, 1/4W, 5%
2— " CAPACITOR " " " MICROFARADS/VOLTS
3 - PCA 2700-0055-00 (FOR USE ON 24V SYSTEM)
R81, R82 = 180 Ω, 1/2 W V_B = ±24V V_A = ±15V
PCA 2700-0055-01 (FOR USE ON 18V SYSTEM)
R81, R82 = 68 Ω, 1/2 W V_B = ±18V V_A = ±15V

BIAS & ERASE BOARD 27D55
Figure 53 JH-110A Page 10-7

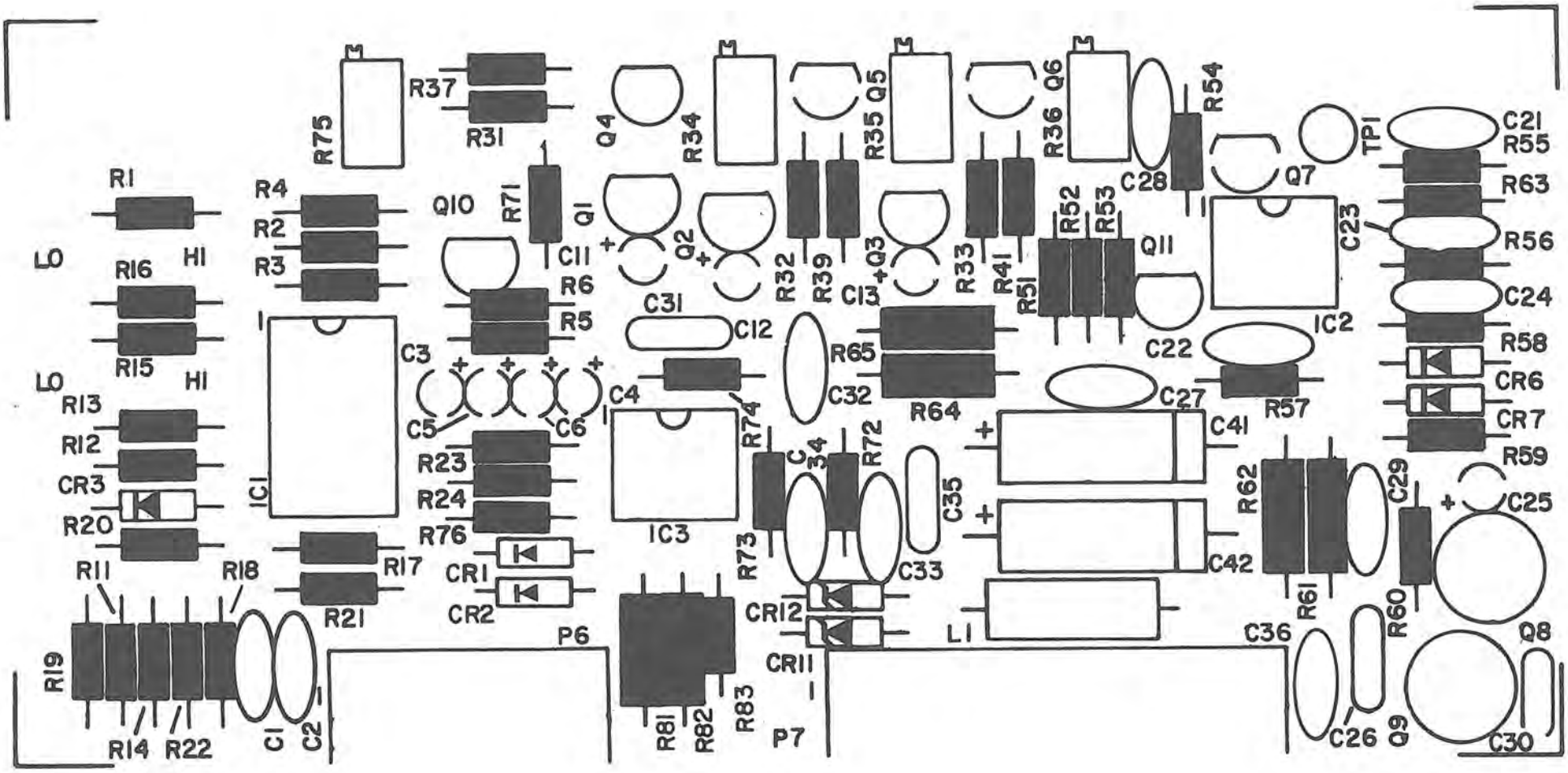
R75
R37
R31
Q4
R34
R35 Q5
R36 Q6
C28
R54
Q7
TP1
C21
R55
R63
R56
C24
R58
CR6
CR7
R59
C25
Q8
C30
Q9
C26
C36
R60
R61
R62
C29
C41
C42
L1
C27
R57
IC2
C23
Q11
C22
R52
R53
R51
R33
R41
R32
R39
Q3
C13
R65
R64
C32
C31
C12
Q2
Q1
R71
C11
R6
R5
Q10
R4
R2
R3
R1
R16
R15
HI
LO
R13
R12
CR3
R20
R11
R18
R19
R14
R22
C1
C2
IC1
C3
C5
C6
C4
R23
R24
R76
R17
R21
CR1
CR2
P6
IC3
R74
R73
C34
R72
C35
C33
CR12
CR11
R81
R82
R83
P7

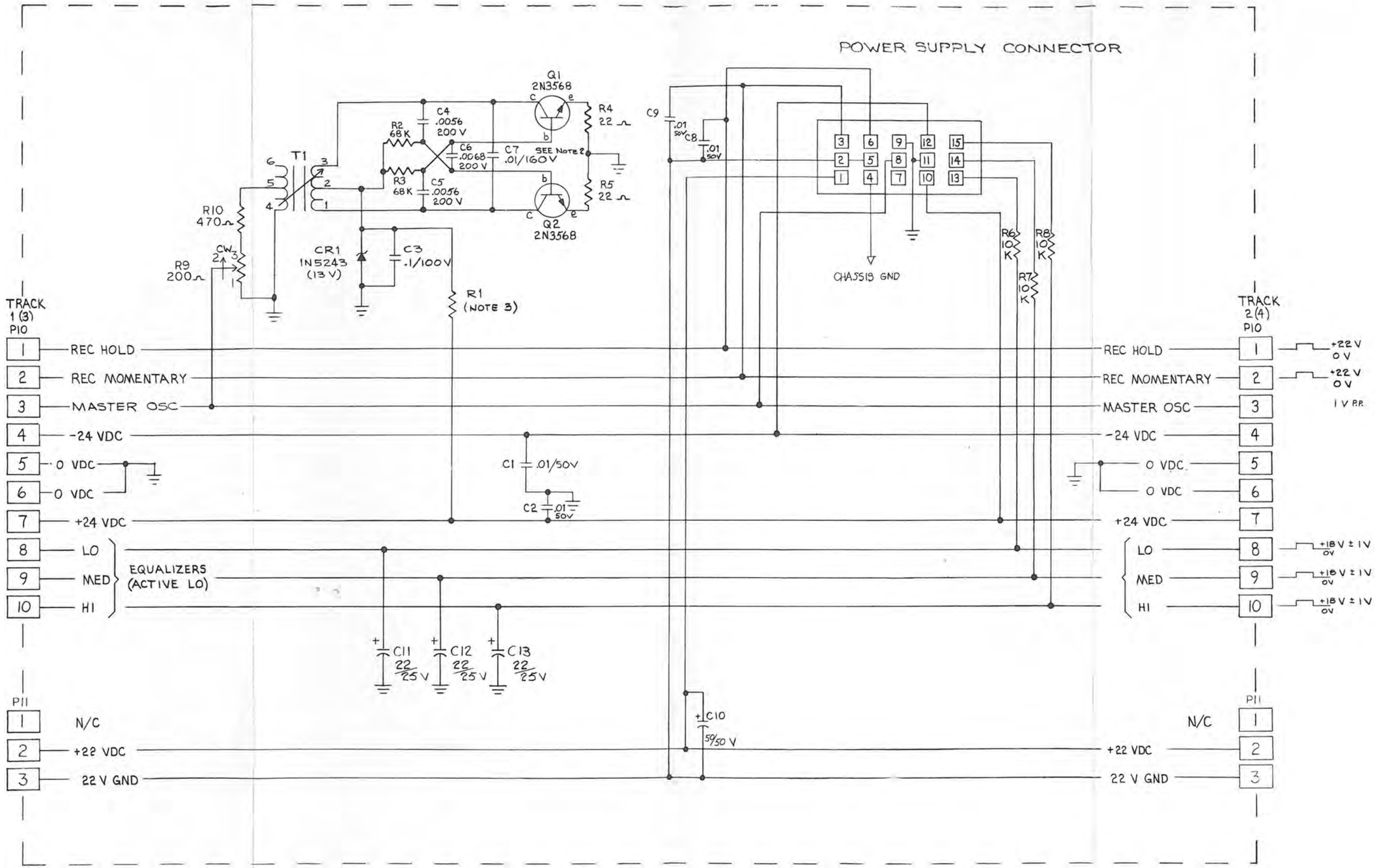

NOTE:
1. UNLESS OTHERWISE SPECIFIED.
   ALL RESISTORS ARE 1/2 W, 5%
   ALL CAPACITORS ARE IN MICROFARADS.
2. C7 TO HAVE HIGH THERMAL STABILITY
3. PCA 2700-0005-00
   R1 IS 220 Ω
   PCA 2700-0005-01
   R1 IS 100 Ω

Strip Board With Oscillator
27D5

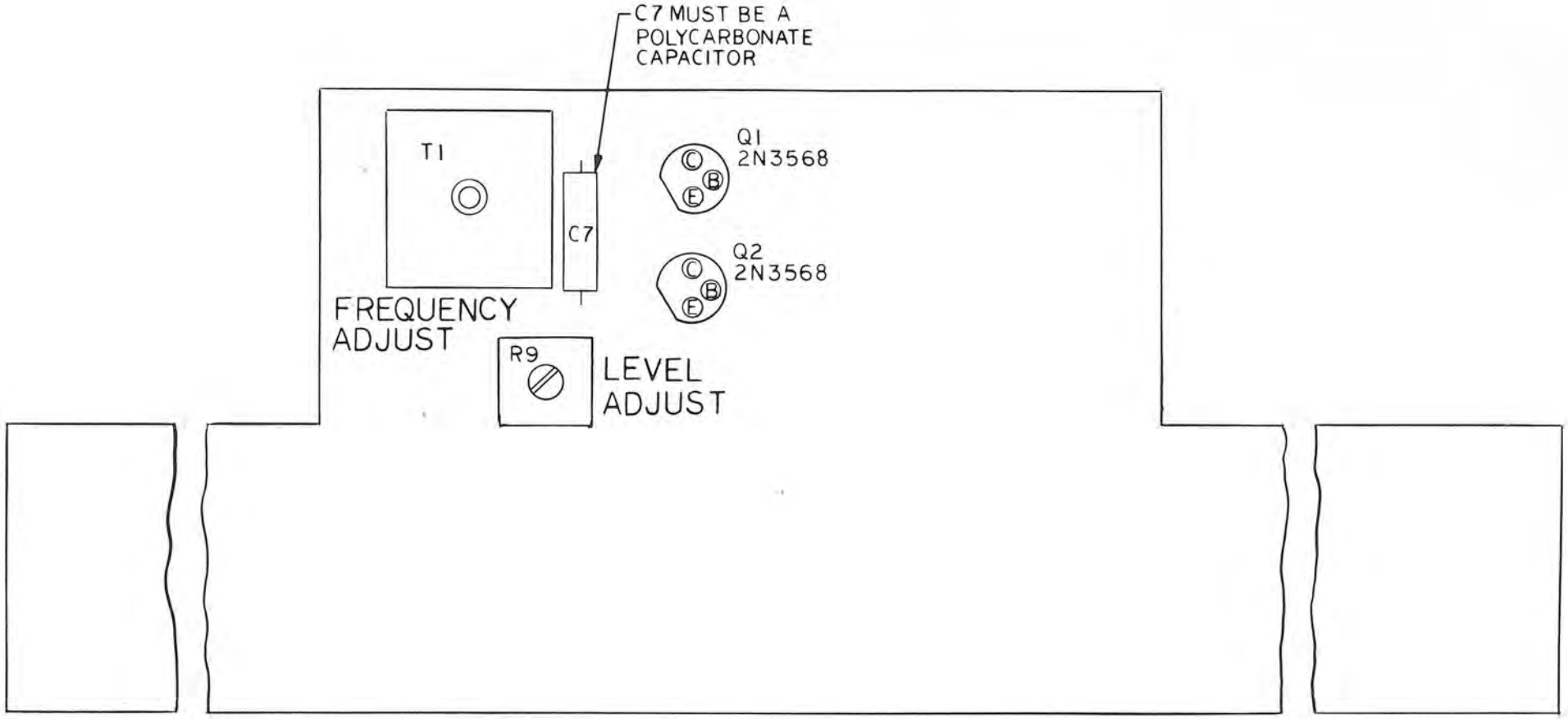

P/N 2700-0005-00

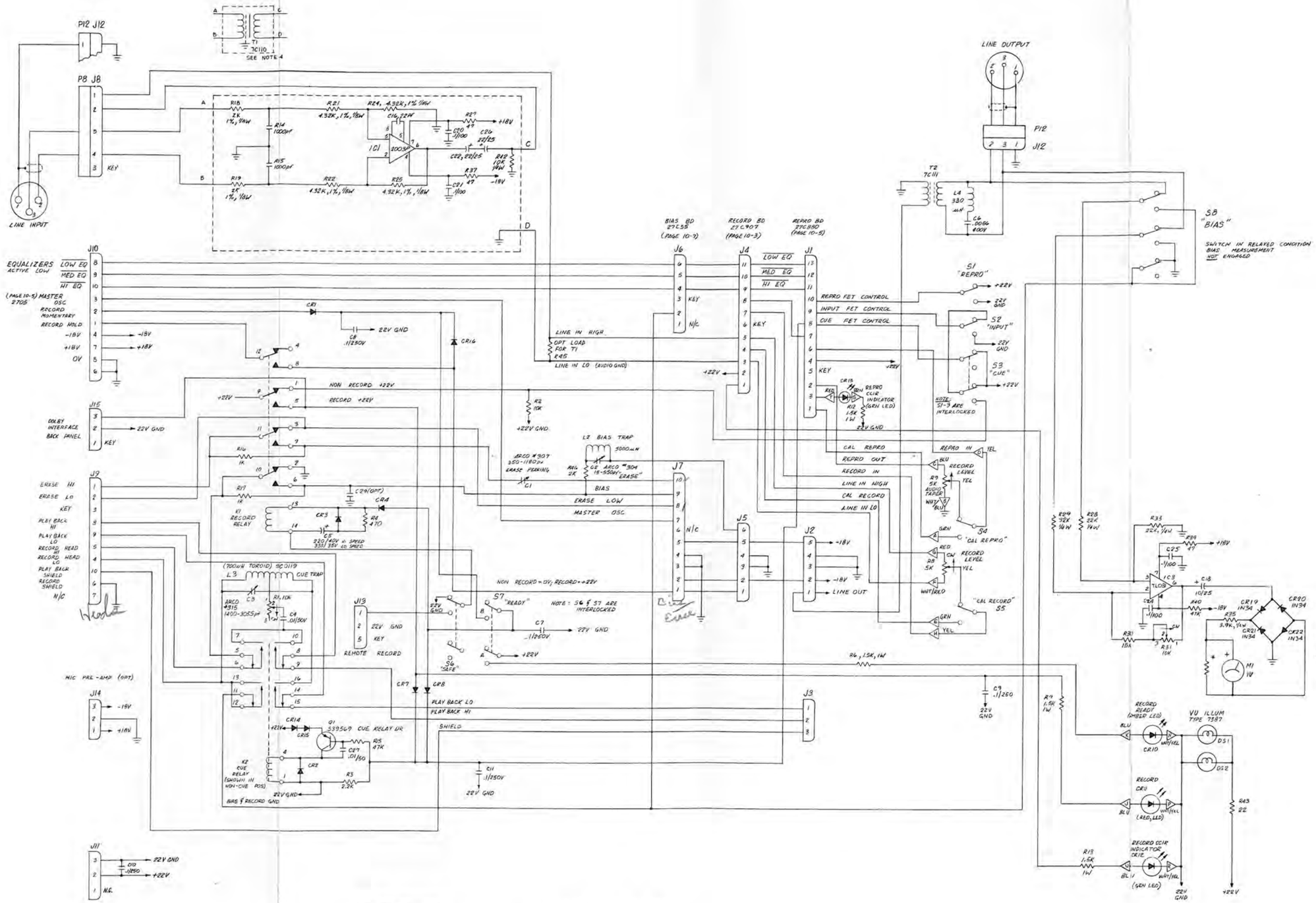

LAST REF DESIGN. USED	NOT USED
C28	C10,(12),13,17,23,24
CR22	CR5,6,9,17,18
DS2	C17,19,21,28
IC3	IC2
J15	
K2	
L4	L1
Q1	
M1	
R45	R5,10,11,14,36
S8	R44,32,33,41
T2	R26,20

NOTES: UNLESS OTHERWISE SPECIFIED
1. ALL RESISTORS ARE IN OHMS 1/4W, 5%.
2. ALL CAPACITORS ARE IN MICROFARADS/VOLTS
3. ALL DIODES ARE 1N4004
4. T1 MAY SUBSTITUTED FOR CKT SHOWN INSIDE THE DASHED AREA.

Audio Mother Board
27E17
JH-110A

Figure 55

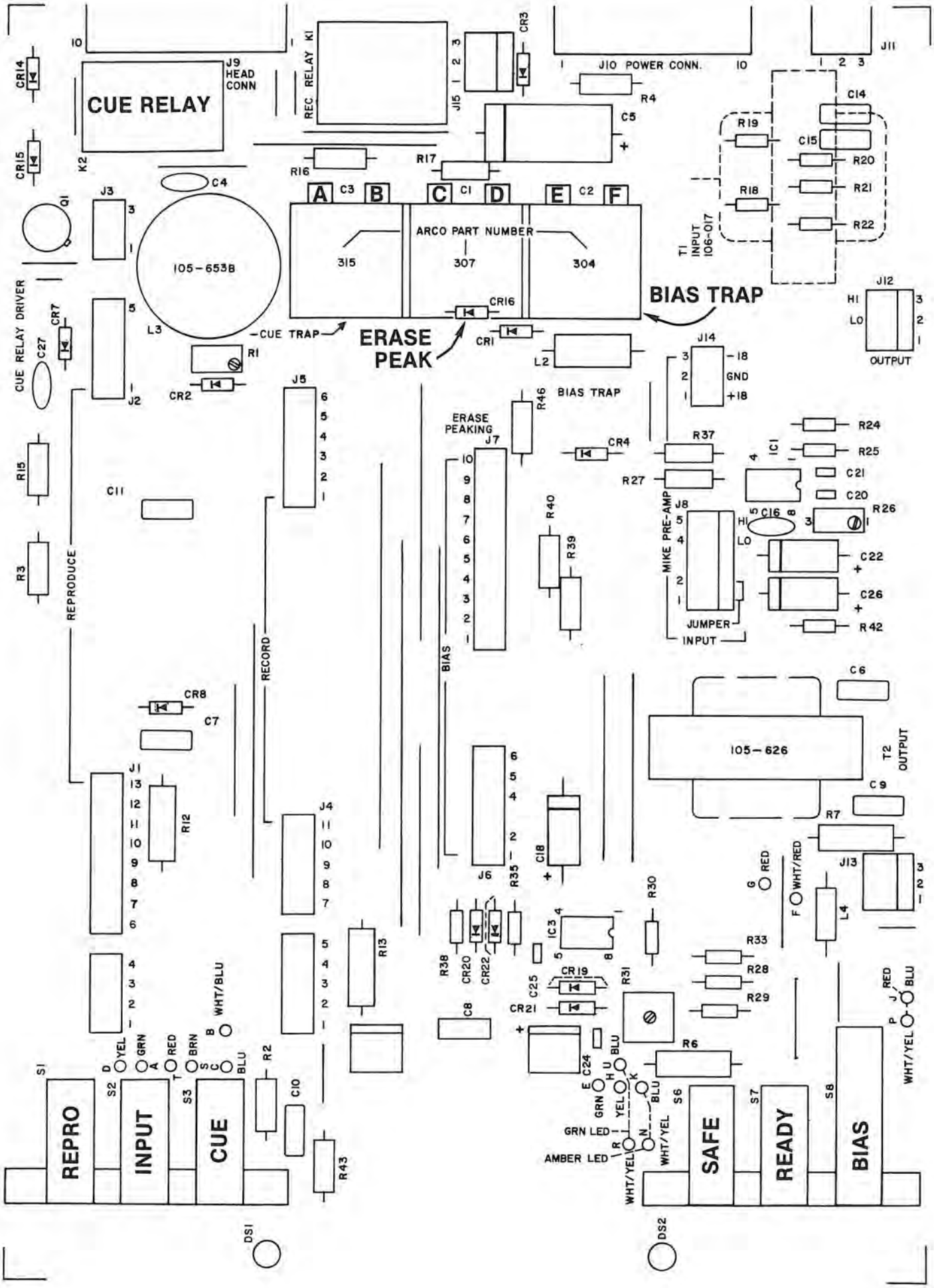
CUE RELAY
J9 HEAD CONN
REC RELAY K1
J15
CR3
J10 POWER CONN.
J11
CR14
CR15
K2
Q1
J3
C4
105-653B
L3
CUE RELAY DRIVER
CR7
C27
J2
R1
CR2
-CUE TRAP
ARCO PART NUMBER
315
307
304
ERASE PEAK
CR16
CR1
L2
BIAS TRAP
R16
R17
C5
C3
C1
C2
A
B
C
D
E
F
R4
C14
R19
C15
R20
R21
R18
R22
T1 INPUT 106-017
J12
HI
LO
OUTPUT
J14
GND
+18
-18
R46
ERASE PEAKING
J7
CR4
R37
R27
R24
R25
IC1
C21
C20
C16
R26
J8
MIKE PRE-AMP
JUMPER
INPUT
C22
C26
R42
R40
R39
R15
C11
R3
REPRODUCE
J5
RECORD
BIAS
CR8
C7
J1
R12
J4
J6
R35
C18
C6
105-626
T2 OUTPUT
C9
R7
J13
L4
G RED
F WHT/RED
R30
IC3
R33
R28
R29
R38
CR20
CR22
C25
CR19
CR21
R31
C8
R13
WHT/BLU
B
D YEL
GRN A
RED T
BRN S
C BLU
S1
S2
S3
R2
C10
R43
C24
E GRN
H U BLU
YEL K
BLU
GRN LED
R
N
AMBER LED
WHT/YEL
WHT/YEL
R6
S6
S7
S8
J RED
BLU
P
WHT/YEL
REPRO
INPUT
CUE
SAFE
READY
BIAS
DS1
DS2

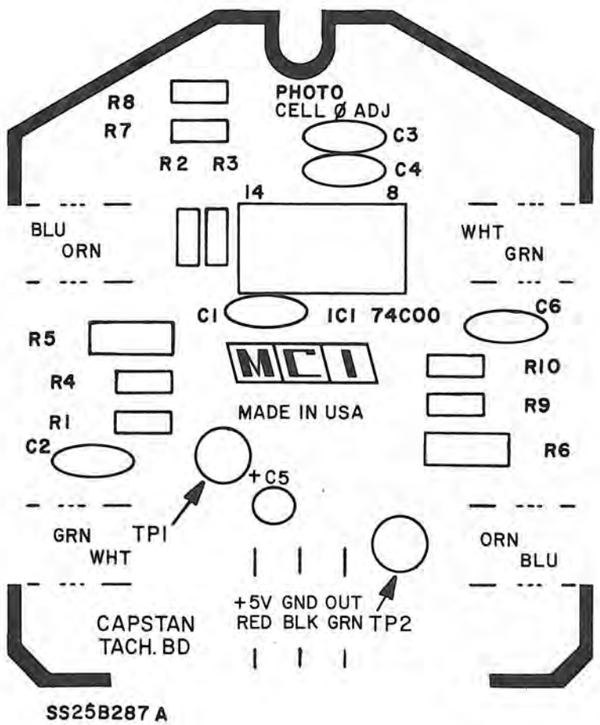

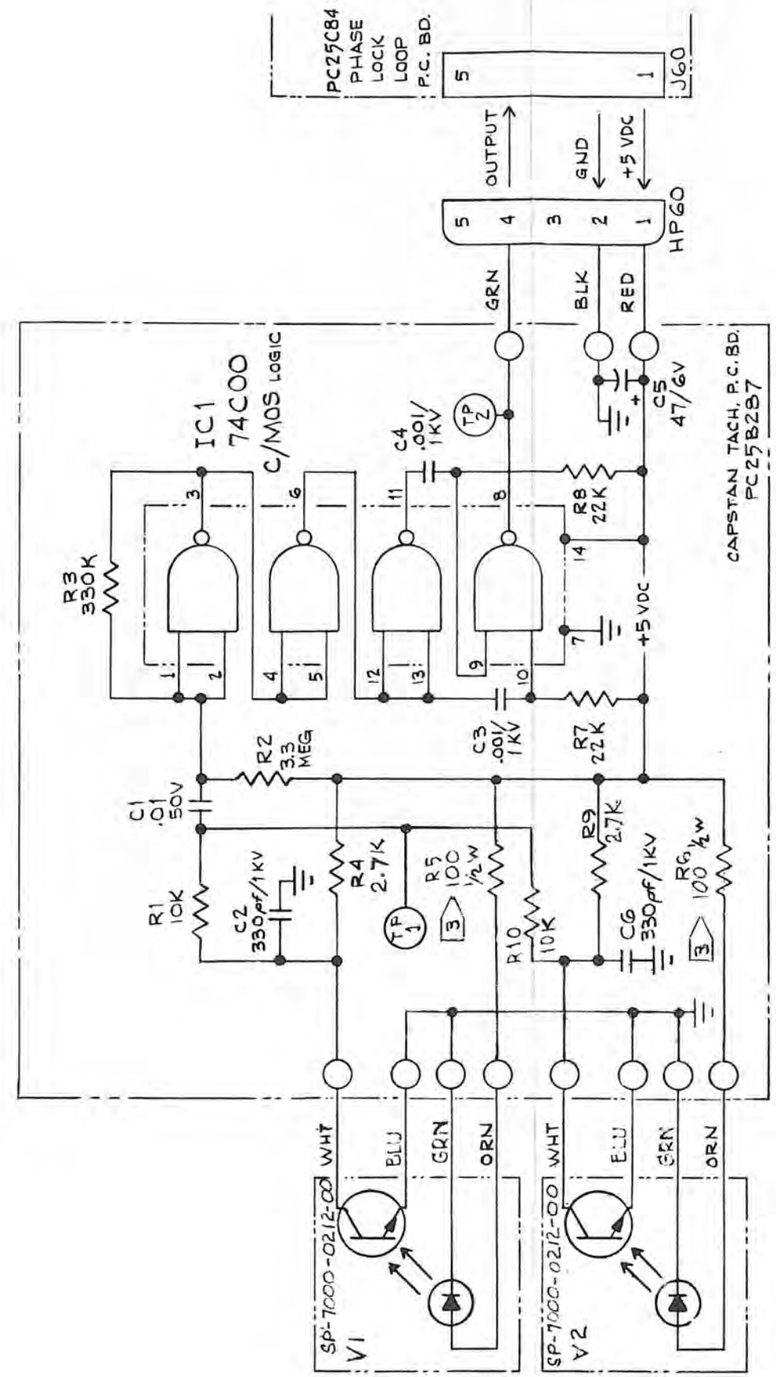

NOTES:
1.) UNLESS OTHERWISE SPECIFIED:
ALL RESISTOR VALUES ARE IN OHMS, 1/4 W, 5%;
ALL CAPACITOR VALUES ARE IN MICROFARADS.
2.) TP1 & TP2 ARE SWAGED TERM. POSTS.
3 R5 & R6 ARE NOMINAL VALUES; MAY CHANGE AT FINAL CHECKOUT.
4.) USE LEADS AS SUPPLIED WITH V1 & V2.
5.) WIRES TO HP60 ARE 22 AWG, 7 STRAND.

Capstan Tach Board
25B287

LINE FUNCTION TABLE (SEE NOTE 1)	
J42-PIN-4	CONT. SEL. SW. EXT
-5	CONT. SEL. SW COMM.
-6	STOP LINK THRU
-7	STOP LINK THRU
-8	REF. SIG. SEL. SW. FIXED
-9	VAR. SPEED POT C.C.W.
-10	SPEED SEL. SW. 7.5 IPS (NOT USED)
-11	SPEED SEL. SW. 15 IPS LO
-12	VAR. SPEED POT C.W.
-13	REF. SIG. SEL. SW. COMM. & SPEED SEL. SW. 30 IPS HI
-14	REF. SIG. SEL. SW.
-15	SPEED SEL. SW. COMM.

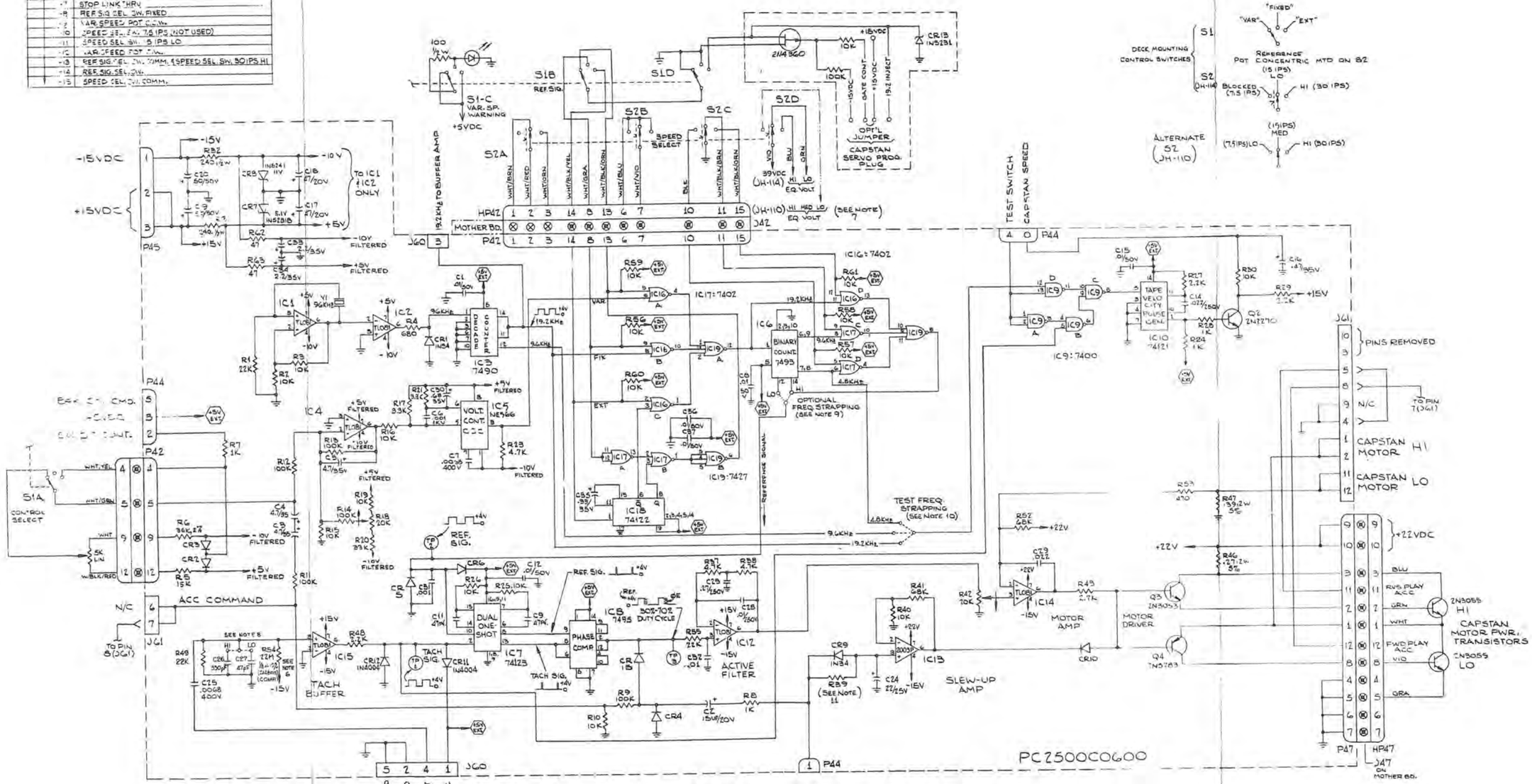

NOTES:

1) MOTHER BD. MOLEX CODE:
   ⊗ – HARNESS FROM REAR
   ⊗ – HARNESS FROM REAR & PLUG ON BLOCK FROM FRONT.
2) U.O.S. RES. ARE ½ W-5%
   RES. VALUES ARE IN OHMS
3) U.O.S. CAP. VOLT RANGES ARE WORKING VOLTS DC
   CAP. VALUES ARE IN MICROFARADS
4) U.O.S. DIODES ARE IN914
5) P42-1,-2, AND -3 ARE NON-EXISTENT
6) R54 IS USED IN MACHINES WITH RENCO TACH.
7) ALTERNATE S2D FOR JH-110 (SEE WD26D186)
8) HI – ALL JH-114, JH-110 30/15/7½ IPS
   LO – JH-110 15/7½/3¾ IPS
9) OP FREQ STRAPPING
   HI - JH-114 30/15 IPS
   JH-110 30/15/7½ IPS
   LO - JH-114 15/7½ IPS
   JH-110 15/7½/3¾ IPS
10) TEST FREQ STRAPPING
   19.2 KHz - JH-114 30/15 IPS
   JH-110 30/15/7½ IPS
   9.2 KHz - JH-114 15/7½ IPS
   JH-110 15/7½/3¾ IPS
11) JH-114 – R39 IS A 39K RESISTOR
   JH-110 – R39 IS A 10K RESISTOR
   JH-110M - R39 IS A 39K RESISTOR
12) ⊗ ALSO TIES TO PIN 14 AT IC9, IC16, IC17 & IC19
   ⊕ ALSO TIES TO PIN 7 AT IC9, IC16, IC17 & IC19

LIST REF. DES. USED	REF. DES. NOT USED
V1	C10,15,21,32
Q4	IC11
CR14	R21,24,33-36,44,45,50,51
IC19	Q1
C37	
R65	

PHASE LOCKED LOOP BD 25E600

Figure 57 JH-110A

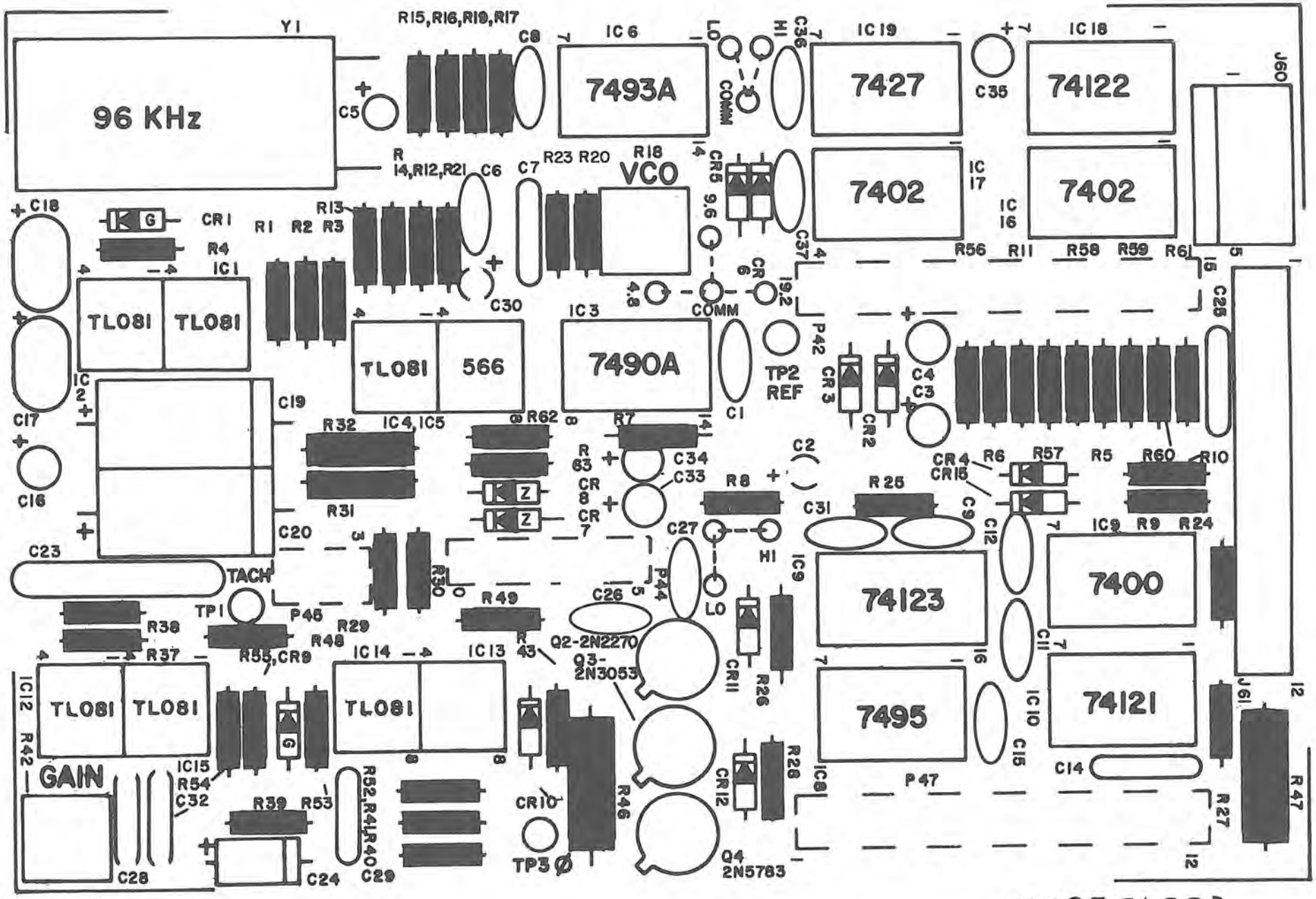
96 KHz
Y1
R15,R16,R19,R17
C8
IC 6
7493A
LO
HI
COMM
C36
IC 19
7427
C35
IC 18
74122
J60
C5
R 14,R12,R21
C6
C7
R23 R20
R18
VCO
CR5
9.6
7402
IC 17
IC 16
7402
C37
R56
R11
R58
R59
R61
C18
CR1
R1 R2 R3
R13
R4
IC1
TL081
TL081
C30
4.8
CR 6
19.2
IC3
7490A
COMM
P42
TP2
REF
C25
TL081
566
C1
CR 3
CR2
C4
C3
IC 2
C19
C17
R32
IC4,IC5
R62
R7
R 63
C34
C33
C2
CR4
CR15
R6
R57
R5
R60
R10
C16
R31
CR 8
CR 7
R8
R 25
C31
C9
C12
IC9
R9
R24
C20
C27
HI
IC9
C23
TACH
R30
P44
LO
74123
7400
TP1
P45
R29
R49
C26
R38
R48
R 43
Q2-2N2270
Q3-
2N3053
CR11
R26
C11
R37
R55,CR9
IC 14
IC 13
IC12
TL081
TL081
TL081
7495
74121
J61
R42
R54
IC15
C32
R39
R53
R52,R41,R40
CR10
R46
CR12
R28
IC8
P47
C15
IC 10
C14
R27
R47
GAIN
C28
C24
C29
TP3
Q4
2N5783
SS25C600D

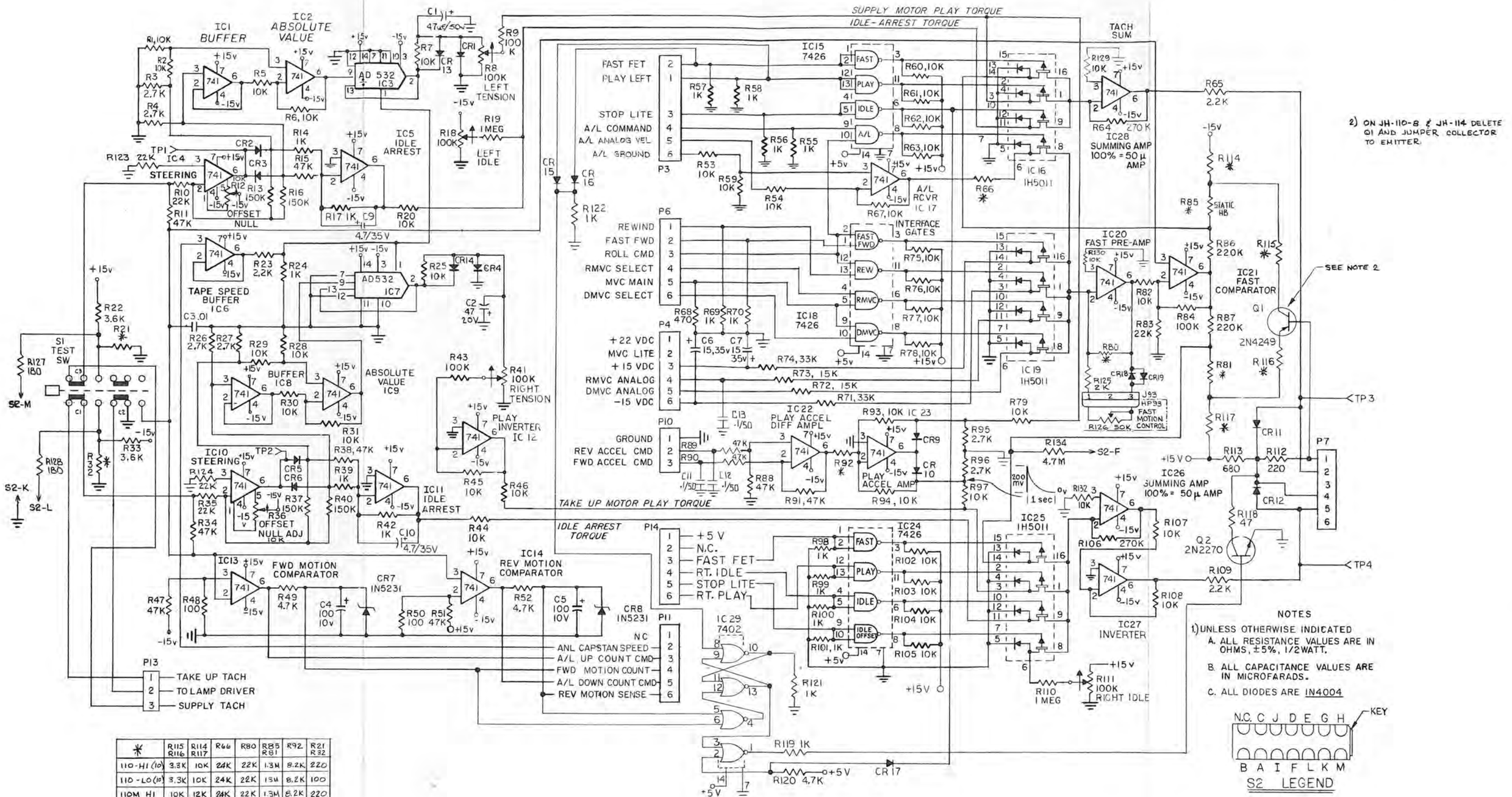

*	R115 R116	R114 R117	R66	R80	R85 R81	R92	R21 R32
110-HI (10)	3.3K	10K	24K	22K	1.3M	8.2K	220
110-LO (10)	3.3K	10K	24K	22K	1.3M	8.2K	100
110M HI	10K	12K	24K	22K	1.3M	8.2K	220
110M LO	10K	12K	24K	22K	1.3M	8.2K	100
110-8	10K	12K	27K	27K	680K	3.6K	220
110-14 HI	3.3K	10K	24K	22K	1.3M	8.2K	220
110-14 LO	3.3K	10K	24K	22K	1.3M	8.2K	100
114 HI	10K	12K	27K	22K	820K	3.6K	220
114 LO	10K	12K	27K	22K	820K	3.6K	100

Analog Torque Board
26D1

Figure 58 JH-110A

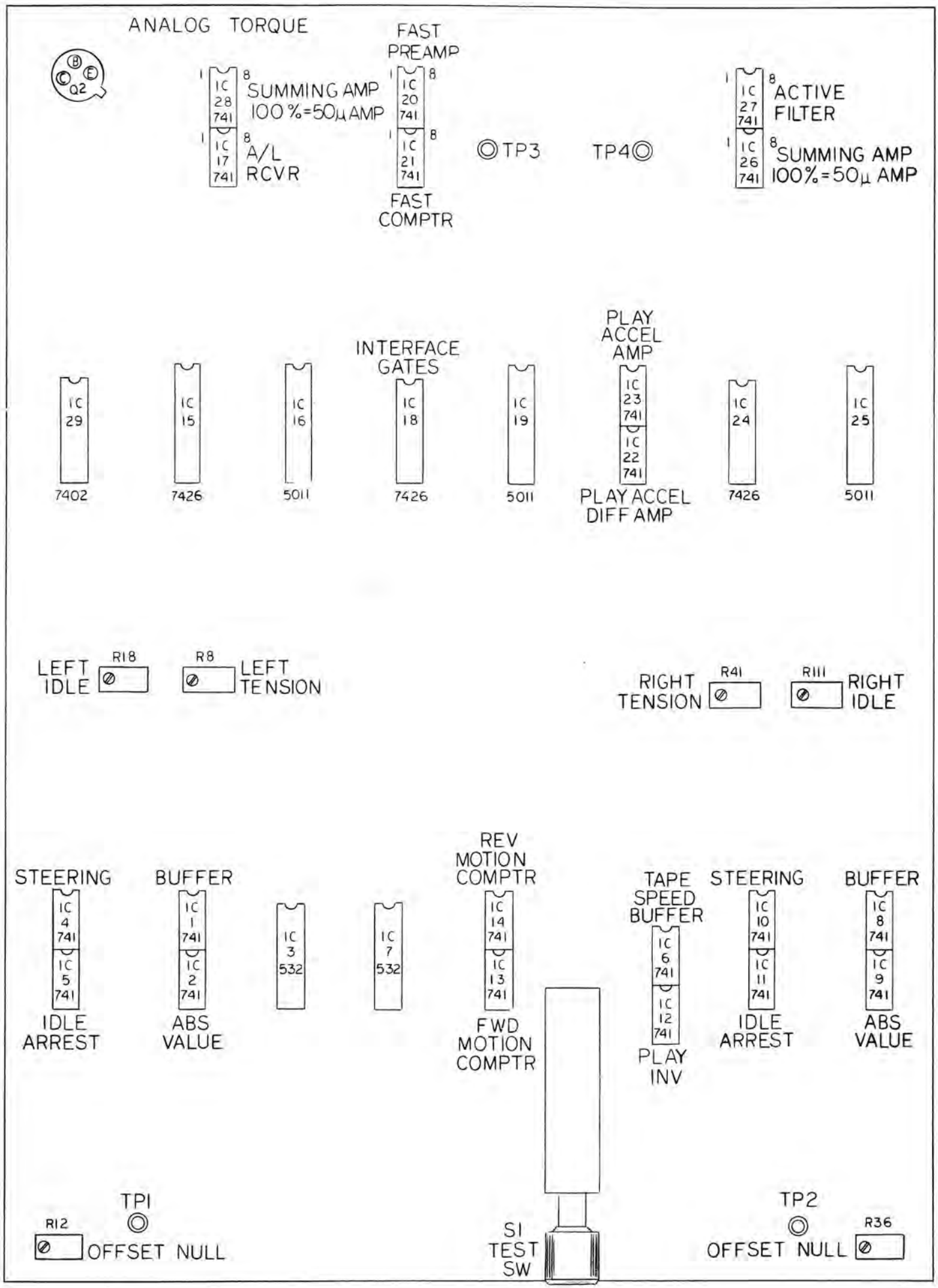
ANALOG TORQUE
Q2
IC 28 741
SUMMING AMP
100%=50μ AMP
IC 17 741
A/L
RCVR
FAST
PREAMP
IC 20 741
IC 21 741
FAST
COMPTR
TP3
TP4
IC 27 741
ACTIVE
FILTER
IC 26 741
SUMMING AMP
100%=50μ AMP
IC 29
7402
IC 15
7426
IC 16
5011
INTERFACE
GATES
IC 18
7426
IC 19
5011
PLAY
ACCEL
AMP
IC 23 741
IC 22 741
PLAY ACCEL
DIFF AMP
IC 24
7426
IC 25
5011
LEFT
IDLE
R18
R8
LEFT
TENSION
RIGHT
TENSION
R41
R111
RIGHT
IDLE
STEERING
IC 4 741
IC 5 741
IDLE
ARREST
BUFFER
IC 1 741
IC 2 741
ABS
VALUE
IC 3 532
IC 7 532
REV
MOTION
COMPTR
IC 14 741
IC 13 741
FWD
MOTION
COMPTR
TAPE
SPEED
BUFFER
IC 6 741
IC 12 741
PLAY
INV
STEERING
IC 10 741
IC 11 741
IDLE
ARREST
BUFFER
IC 8 741
IC 9 741
ABS
VALUE
R12
TP1
OFFSET NULL
S1
TEST
SW
TP2
OFFSET NULL
R36

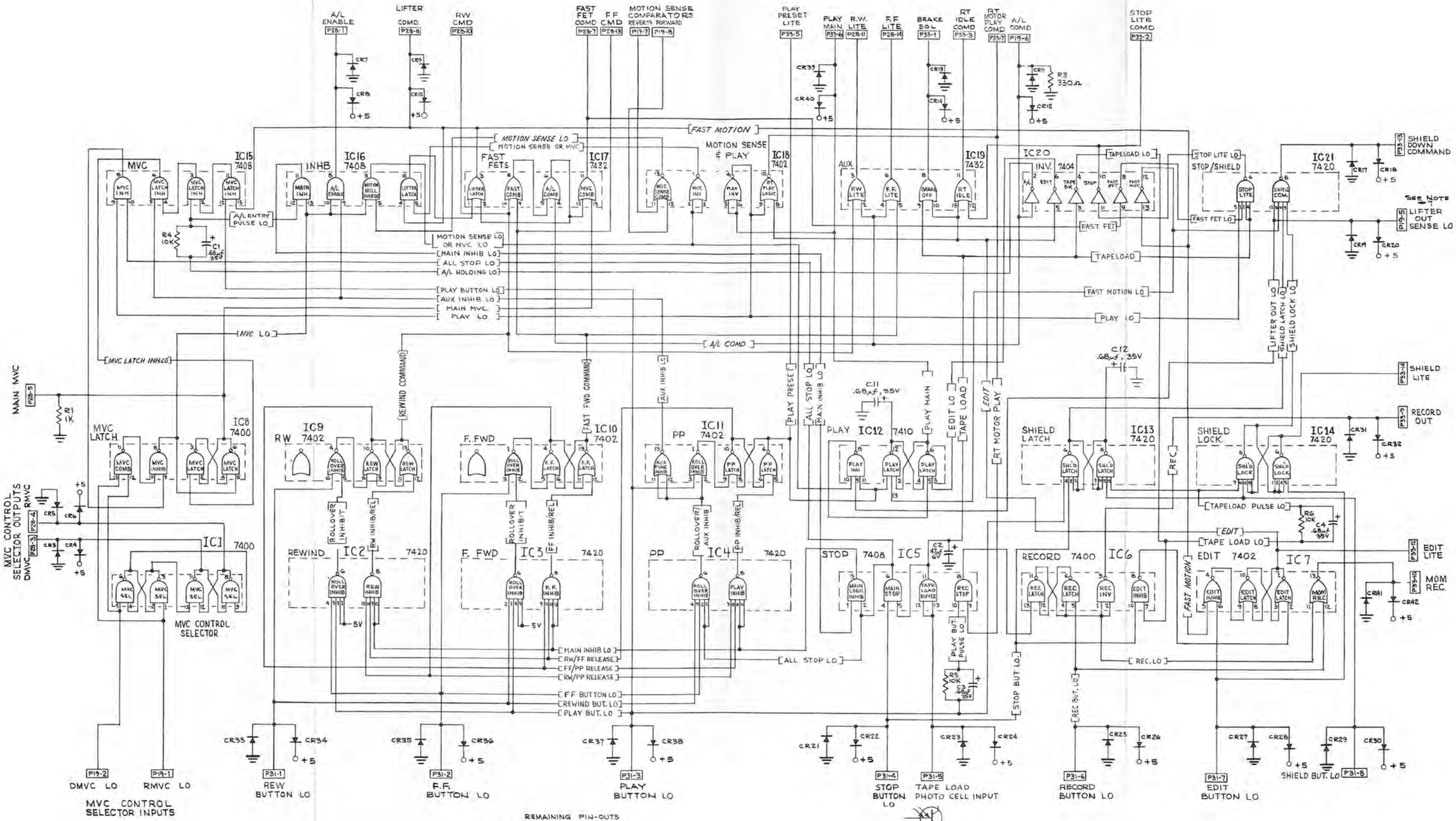

REMAINING PIN-OUTS

+5V	GND	SPARE
P19-3	P28-2 P28-6 P28-9 P28-12 P33-4 P33-8 P33-11	P19-4 P19-9 P28-15 P31-9 P33-15

NOTES:

1.) ALL DIODES ARE 1N4004.

2.) ALL RESISTORS ARE ½ W, 5% TOL.

3.) ALL CAPACITORS ARE TANTALUMS. (C1-C4)

4.) ALL IC'S RECEIVE +5V AT PIN 14 & GND AT PIN 7

5.) USE DECOUPLING CAPS (.01µF) AS NOTED ON ASSY DWG. (C5-C10) THEY ARE NOT SHOWN HERE.

6. ALL FUNCTION CALLOUTS ARE ACTIVE HI UNLESS "LO" IS DESIGNATED.

7. JH-110 USES LOCATE COMMAND FROM RTZ BOARD FOR LIFTER OUT SENSE

Control Logic Board
25D27

Figure 59 JH-110A

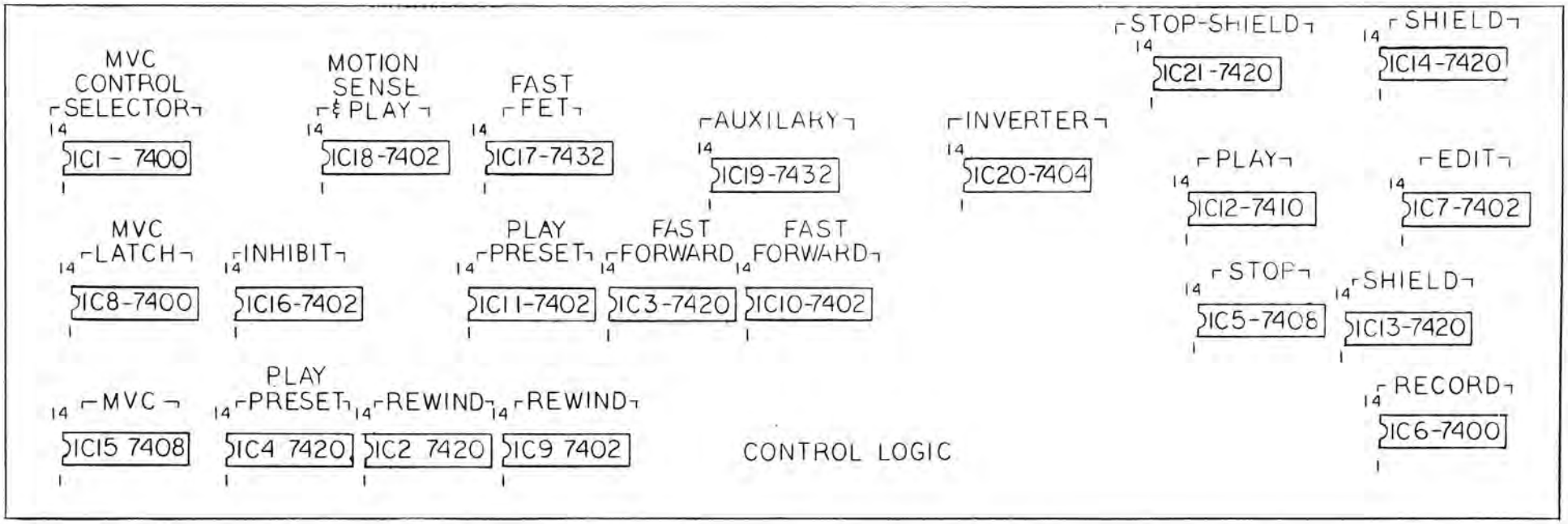
MVC CONTROL SELECTOR
IC1 - 7400
MOTION SENSE & PLAY
IC18-7402
FAST FET
IC17-7432
AUXILARY
IC19-7432
INVERTER
IC20-7404
STOP-SHIELD
IC21-7420
SHIELD
IC14-7420
PLAY
IC12-7410
EDIT
IC7-7402
MVC LATCH
IC8-7400
INHIBIT
IC16-7402
PLAY PRESET
IC11-7402
FAST FORWARD
IC3-7420
FAST FORWARD
IC10-7402
STOP
IC5-7408
SHIELD
IC13-7420
MVC
IC15 7408
PLAY PRESET
IC4 7420
REWIND
IC2 7420
REWIND
IC9 7402
CONTROL LOGIC
RECORD
IC6-7400

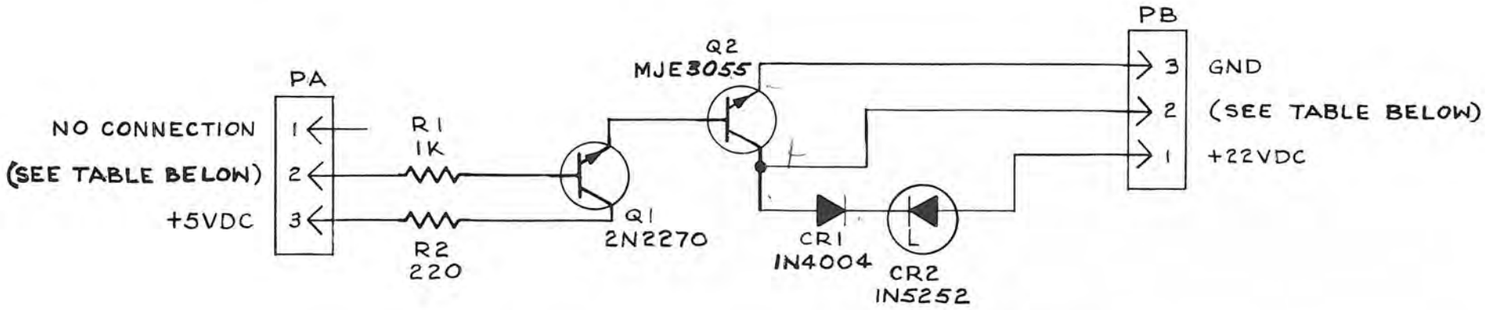

DRIVER BD	PA	PA-2 FUNCTION	PB	PB-2 FUNCTION
BRAKE SOL.	P41	BRAKE LOGIC COMM.	P37	BRAKE SOL. DRIVE
PLAY SOL.	P35	PLAY LOGIC COMMAND	P34	PLAY SOL. DRIVE
"Z" ROLLER SOL.	P30	"Z" ROLLER LOGIC COMM	P29	"Z" ROLLER SOL. DRIVE
LIFTER SOL.	P25	LIFTER LOGIC COMM.	P23	LIFTER SOL. DRIVE
SHIELD SOL.	P20	SHIELD LOGIC COMM.	P16	SHIELD SOL. DRIVE

NOTES: UNLESS OTHERWISE SPECIFIED
1. ALL RESISTORS IN OHMS, ± 5%, 1/2W.

Figure 60

Solenoid Driver Board
25B42
JH-110A

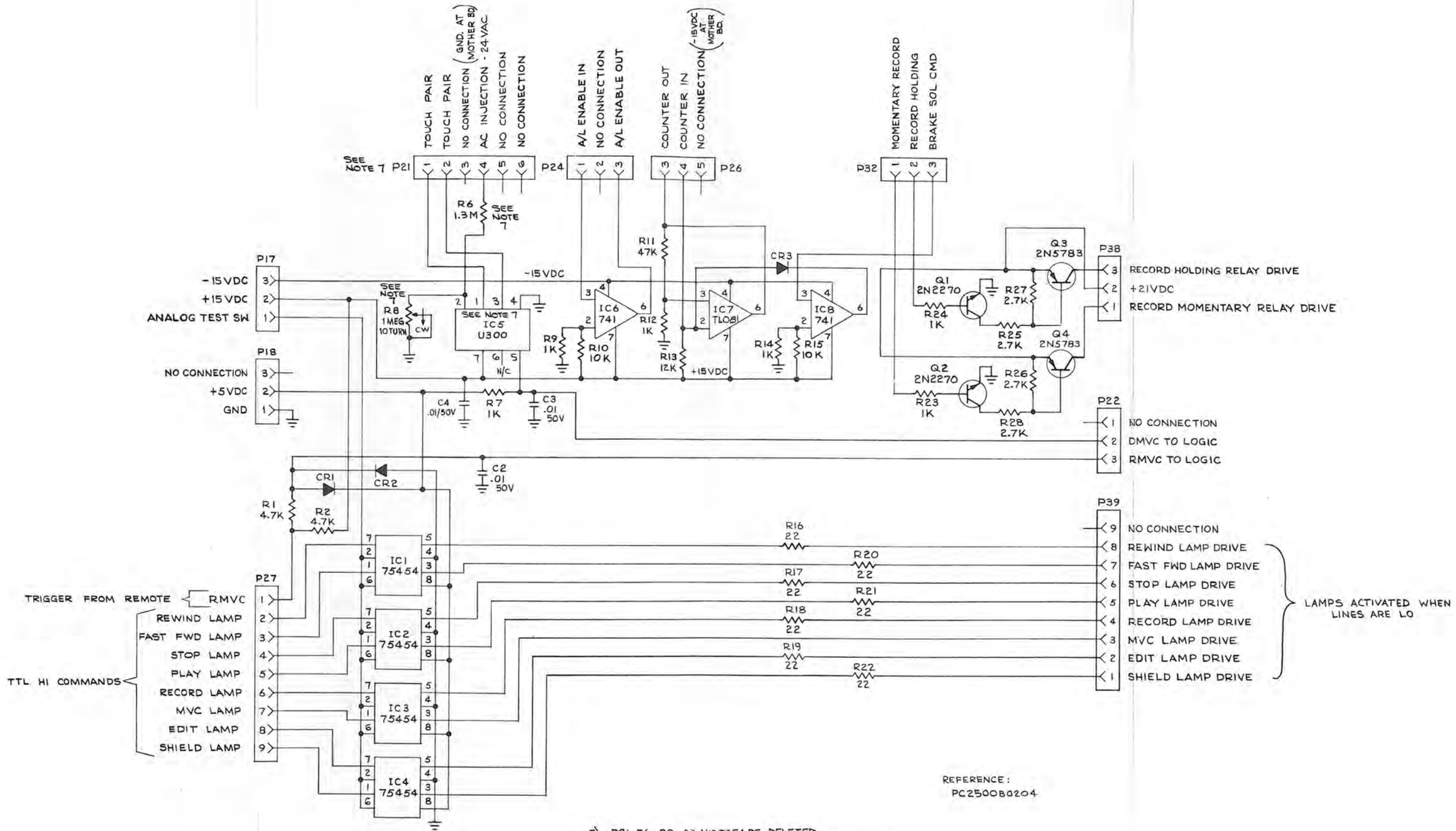

7) P21, R6, R8, C3 AND IC5 ARE DELETED FOR JH-110M-D. R7 IS REPLACED BY JUMPER.

6. AT P26 PINS 1 & 2 ARE NON-EXISTANT.

5. ALL VOLTAGES ARE D.C.

3. ALL DIODES ARE IN4004.

2. ALL RESISTORS ARE IN OHMS, ±5%, 1/2 WATT.

1. ALL CAPACITORS ARE IN MICROFARADS.

NOTES: UNLESS OTHERWISE SPECIFIED.

Interface/Lamp Driver Board
25D204 Page 1 of 2

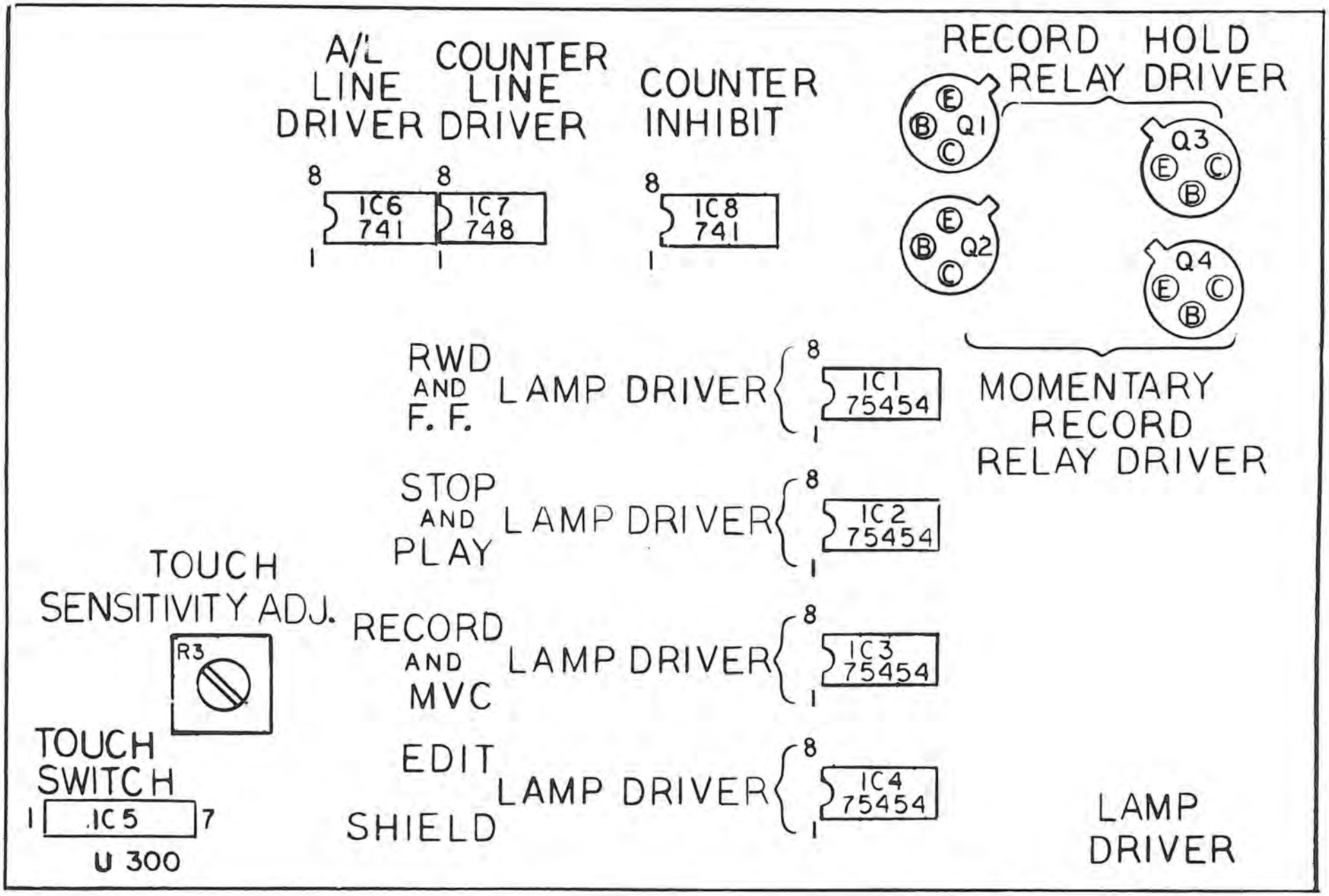
A/L LINE DRIVER
COUNTER LINE DRIVER
COUNTER INHIBIT
RECORD HOLD RELAY DRIVER
IC6 741
IC7 748
IC8 741
Q1
Q2
Q3
Q4
RWD AND F. F. LAMP DRIVER
IC1 75454
STOP AND PLAY LAMP DRIVER
IC2 75454
RECORD AND MVC LAMP DRIVER
IC3 75454
EDIT LAMP DRIVER
IC4 75454
MOMENTARY RECORD RELAY DRIVER
TOUCH SENSITIVITY ADJ.
R3
TOUCH SWITCH
IC5
SHIELD
U 300
LAMP DRIVER

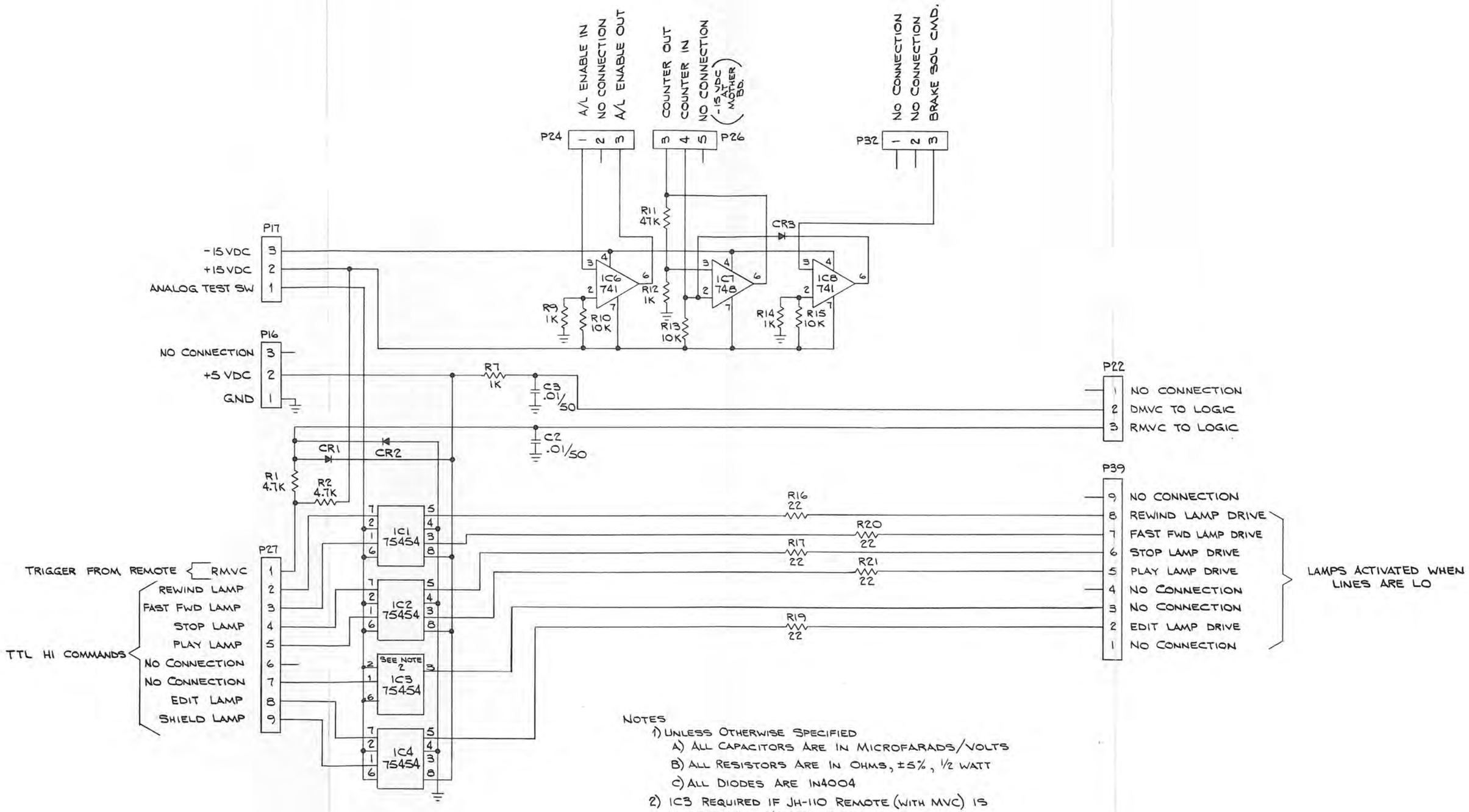

NOTES

1) UNLESS OTHERWISE SPECIFIED
   A) ALL CAPACITORS ARE IN MICROFARADS/VOLTS
   B) ALL RESISTORS ARE IN OHMS, ±5%, ½ WATT
   C) ALL DIODES ARE 1N4004
2) IC3 REQUIRED IF JH-110 REMOTE (WITH MVC) IS SHIPPED WITH MASTERING DECK
3) AT P26 PINS 1 & 2 ARE NON EXISTANT

Interface/Lamp Driver Board
25D204 Page 2 of 2

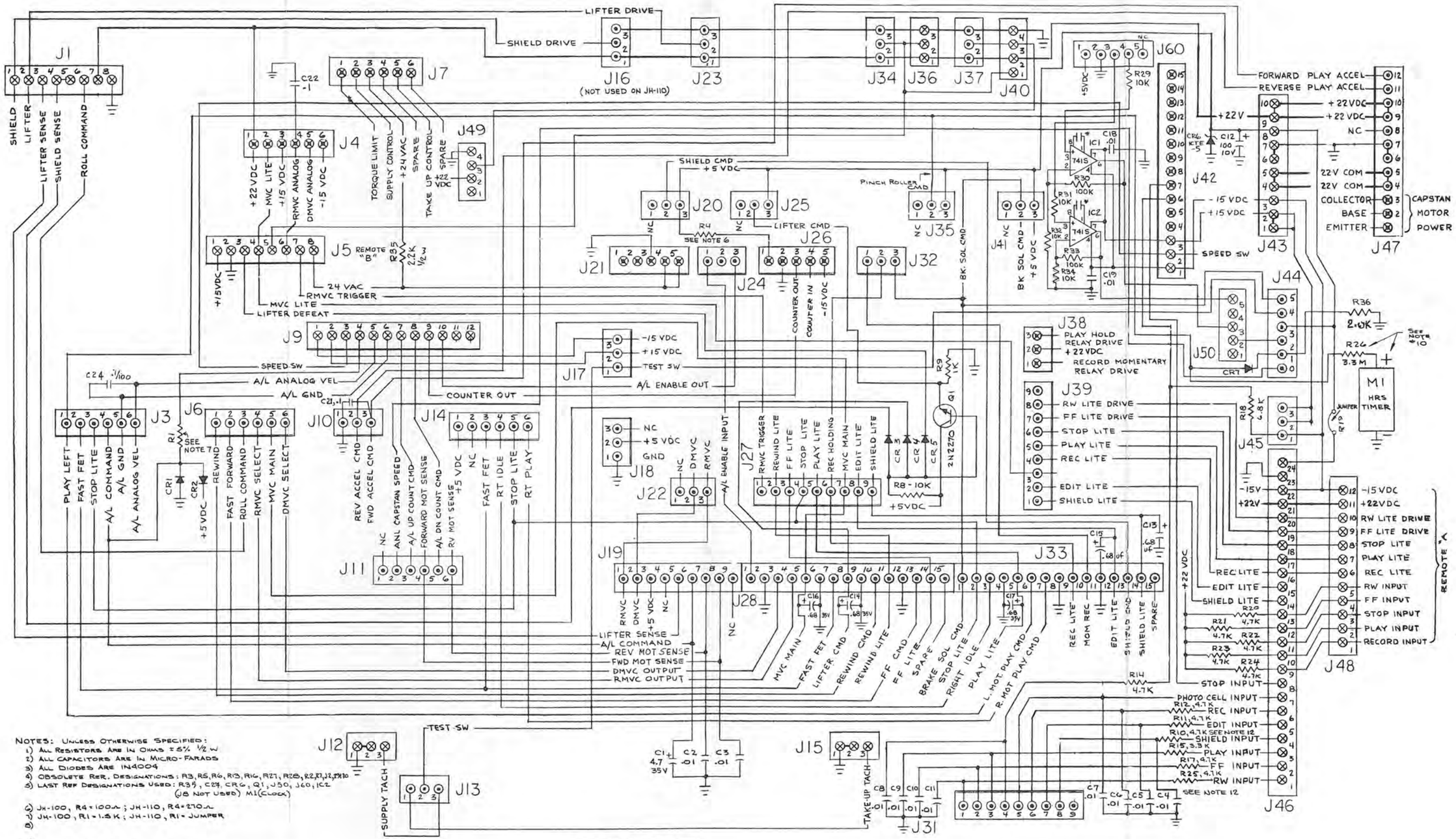

Transport Mother Board
25D85

Figure 62 JH-110A

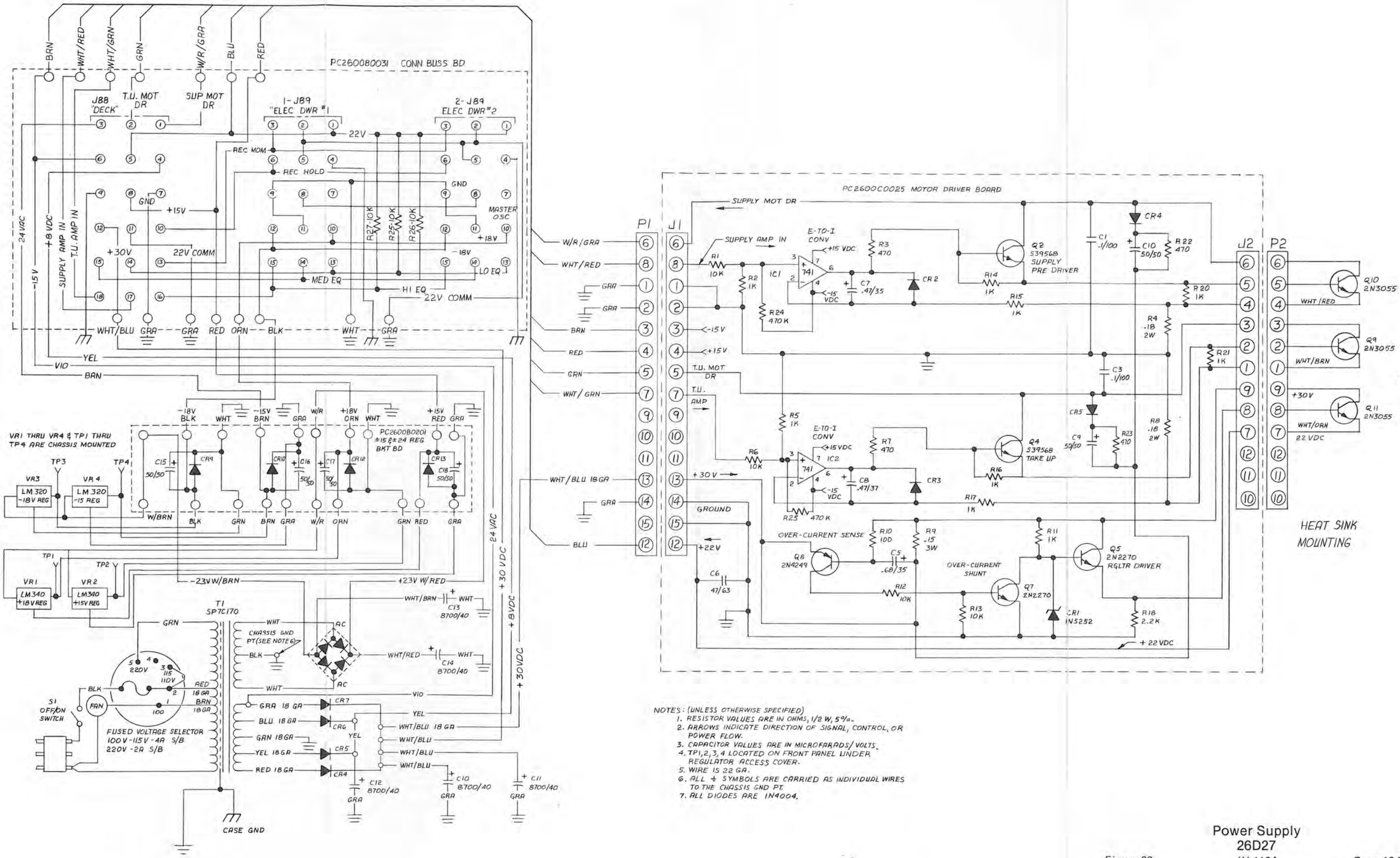

NOTES: (UNLESS OTHERWISE SPECIFIED)
1. RESISTOR VALUES ARE IN OHMS, 1/2 W, 5%.
2. ARROWS INDICATE DIRECTION OF SIGNAL, CONTROL, OR POWER FLOW.
3. CAPACITOR VALUES ARE IN MICROFARADS/VOLTS.
4. TP1,2,3,4 LOCATED ON FRONT PANEL UNDER REGULATOR ACCESS COVER.
5. WIRE IS 22 GA.
6. ALL ⏚ SYMBOLS ARE CARRIED AS INDIVIDUAL WIRES TO THE CHASSIS GND PT.
7. ALL DIODES ARE 1N4004.

Figure 63

Power Supply
26D27

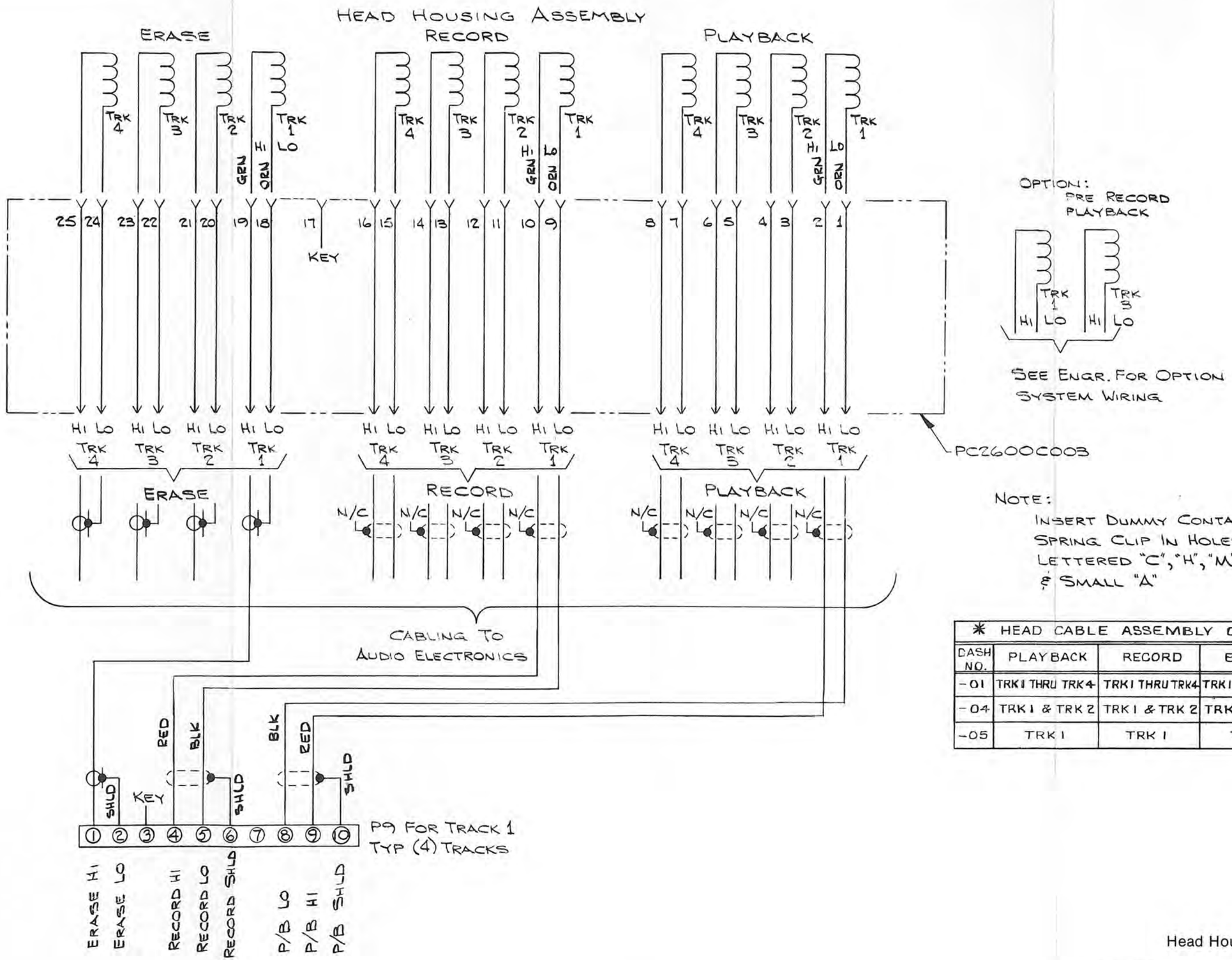

NOTE:

INSERT DUMMY CONTACT OR SPRING CLIP IN HOLES LETTERED "C", "H", "M", "S", "W", & SMALL "A"

* HEAD CABLE ASSEMBLY CHART			
DASH NO.	PLAYBACK	RECORD	ERASE
-01	TRK 1 THRU TRK 4	TRK 1 THRU TRK 4	TRK 1 THRU TRK 4
-04	TRK 1 & TRK 2	TRK 1 & TRK 2	TRK 1 & TRK 2
-05	TRK 1	TRK 1	TRK 1

Head Housing & Connector
26C3

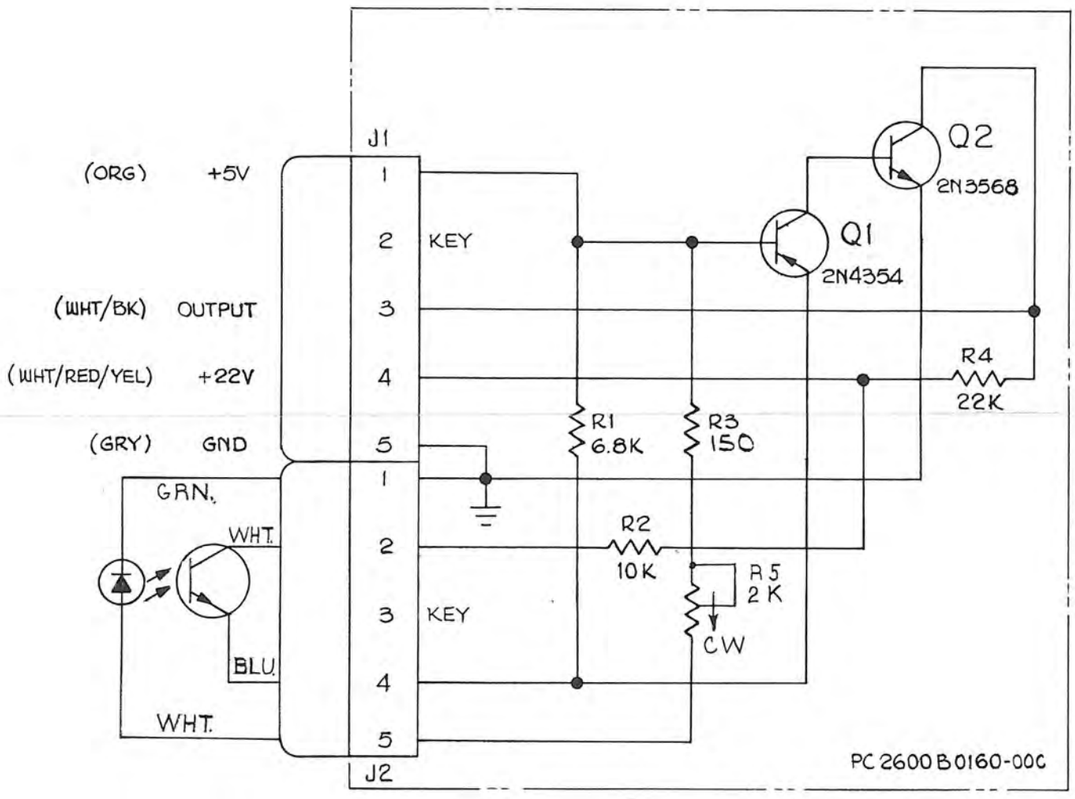

NOTE:

ALL RESISTOR VALUES ARE IN OHMS, 1/4 W, 5%

Figure 65

Photo Sensor Amp Board
26B160
JH-110A

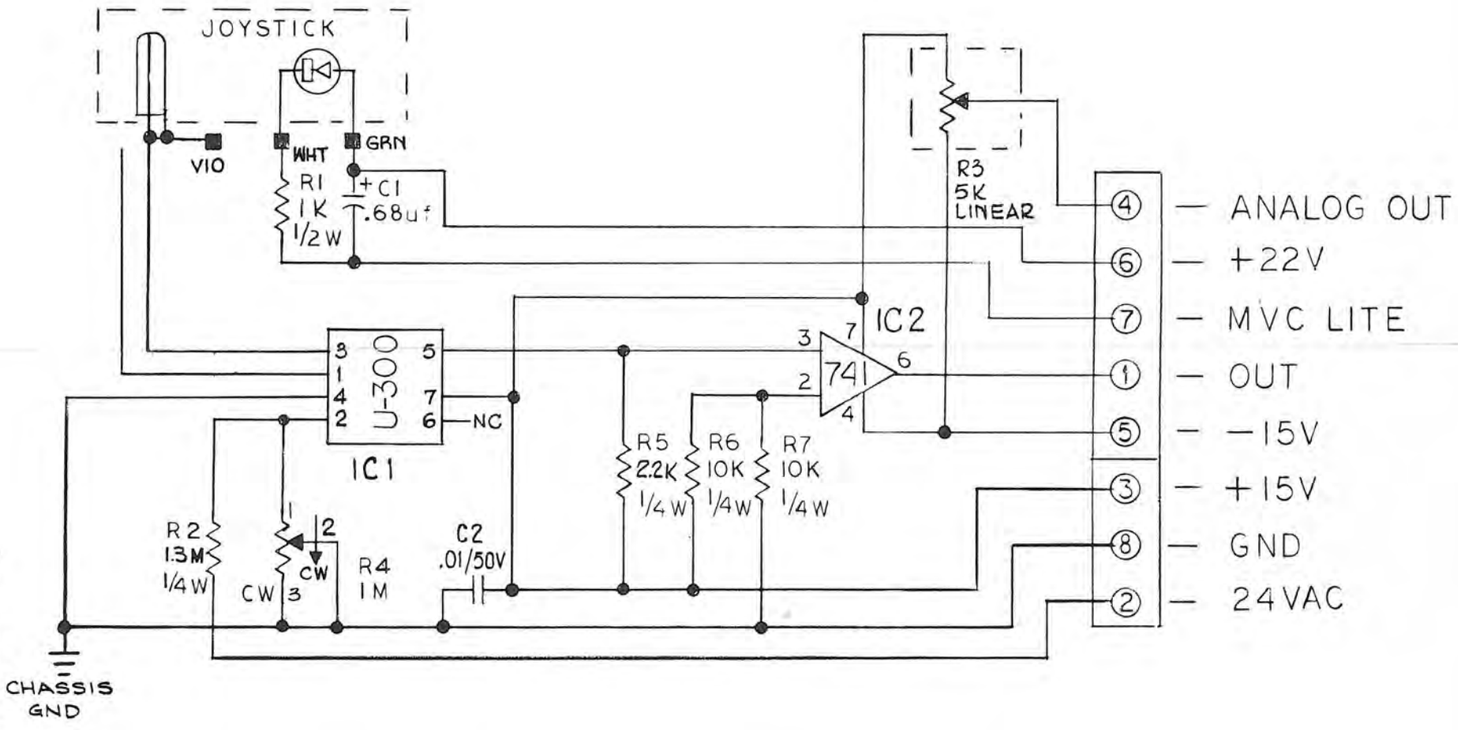

Figure 66

Remote MVC Board
26B162
JH-110A

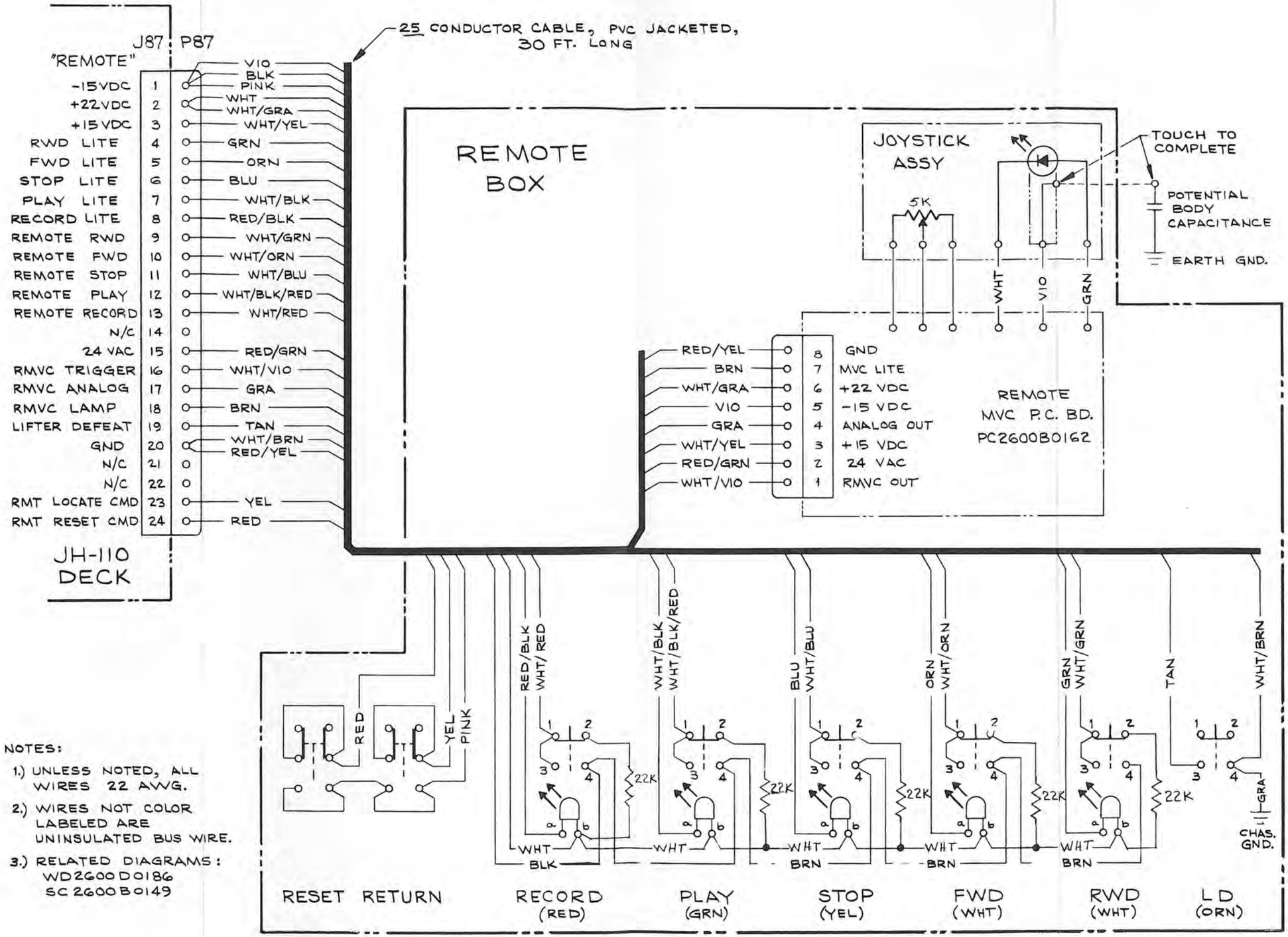

NOTES:

1.) UNLESS NOTED, ALL WIRES 22 AWG.

2.) WIRES NOT COLOR LABELED ARE UNINSULATED BUS WIRE.

3.) RELATED DIAGRAMS:
WD2600D0186
SC2600B0149

Remote Box & Cable
26C150

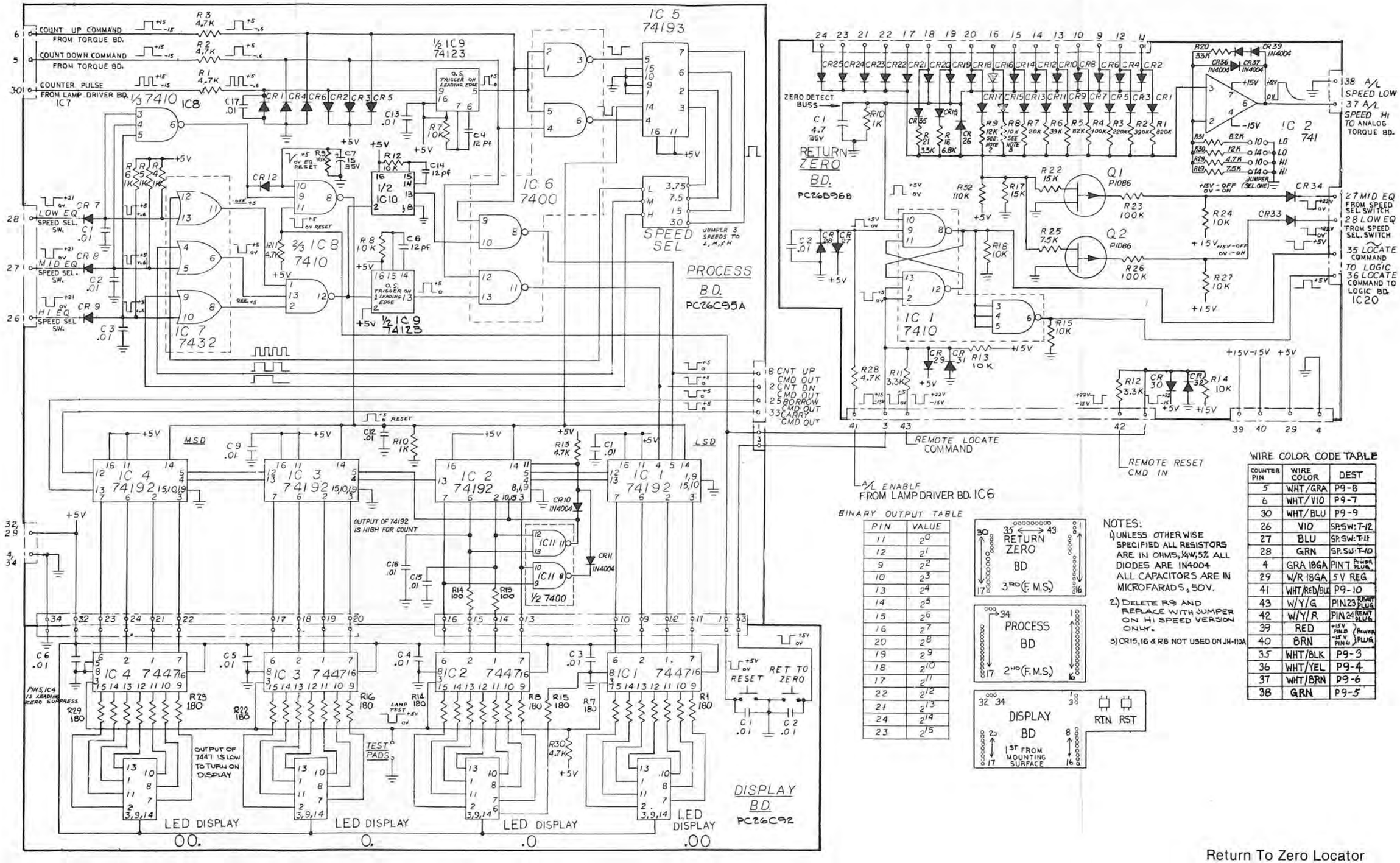

BINARY OUTPUT TABLE

PIN	VALUE
11	2^0
12	2^1
9	2^2
10	2^3
13	2^4
14	2^5
15	2^6
16	2^7
20	2^8
19	2^9
18	2^{10}
17	2^{11}
22	2^{12}
21	2^{13}
24	2^{14}
23	2^{15}

NOTES:

1) UNLESS OTHERWISE SPECIFIED ALL RESISTORS ARE IN OHMS, 1/4W, 5% ALL DIODES ARE 1N4004 ALL CAPACITORS ARE IN MICROFARADS, 50V.

2.) DELETE R9 AND REPLACE WITH JUMPER ON HI SPEED VERSION ONLY.

3) CR15, 16 & R8 NOT USED ON JH-110A

WIRE COLOR CODE TABLE

COUNTER PIN	WIRE COLOR	DEST
5	WHT/GRA	P9-8
6	WHT/VIO	P9-7
30	WHT/BLU	P9-9
26	VIO	SP.SW: T-12
27	BLU	SP.SW: T-11
28	GRN	SP.SW: T-10
4	GRA 18GA	PIN 7 POWER PLUG
29	W/R 18GA	5 V REG
41	WHT/RED/BLU	P9-10
43	W/Y/G	PIN 23 REMT PLUG
42	W/Y/R	PIN 24 REMT PLUG
39	RED	+15V PIN 8 POWER PLUG
40	BRN	-15V PIN 6 POWER PLUG
35	WHT/BLK	P9-3
36	WHT/YEL	P9-4
37	WHT/BRN	P9-6
38	GRN	P9-5

Return To Zero Locator
26D100

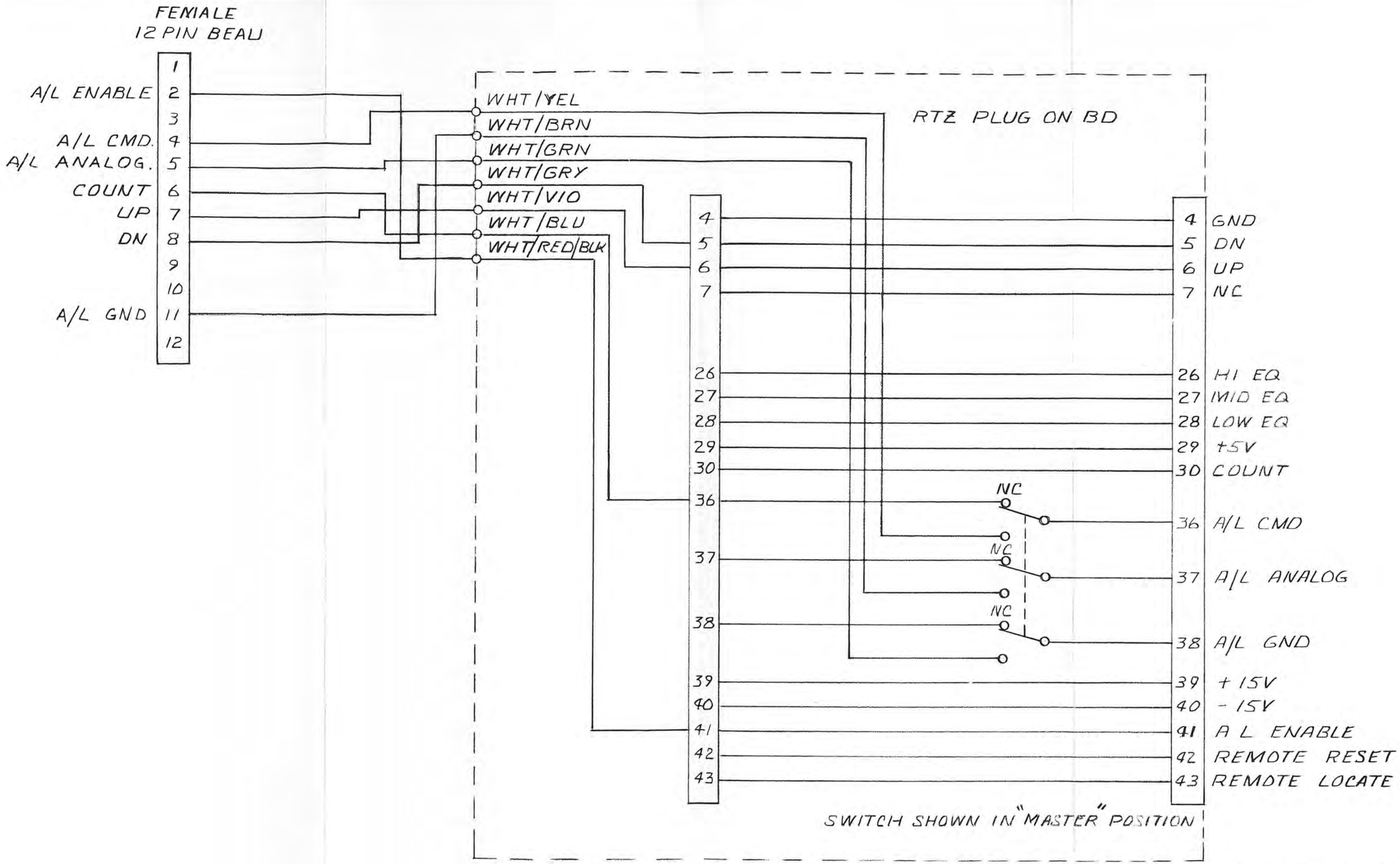

Interface Cable for AutoLock to JH-110A—RTZ
26C102

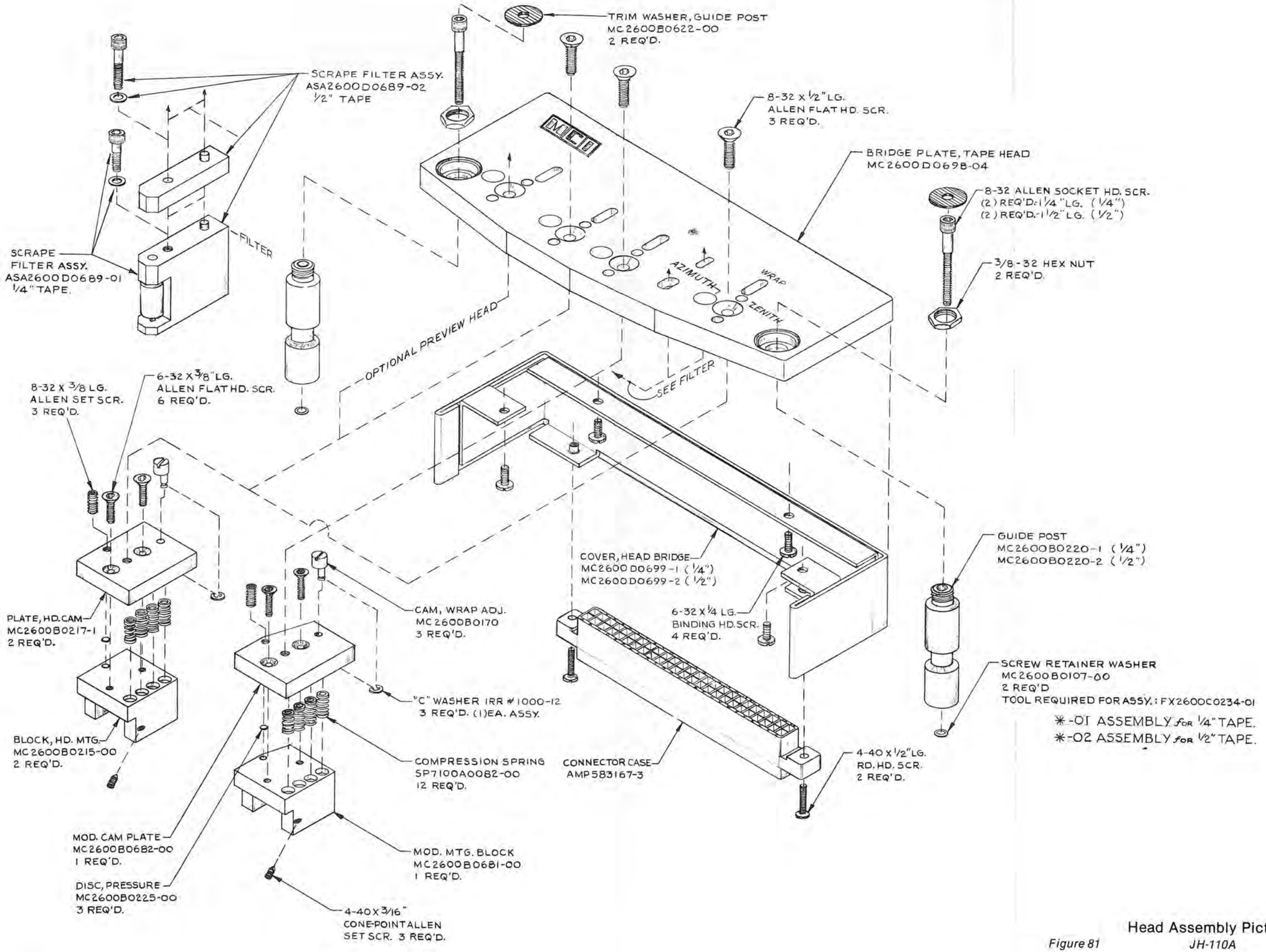

Head Assembly Pictorial

Figure 81

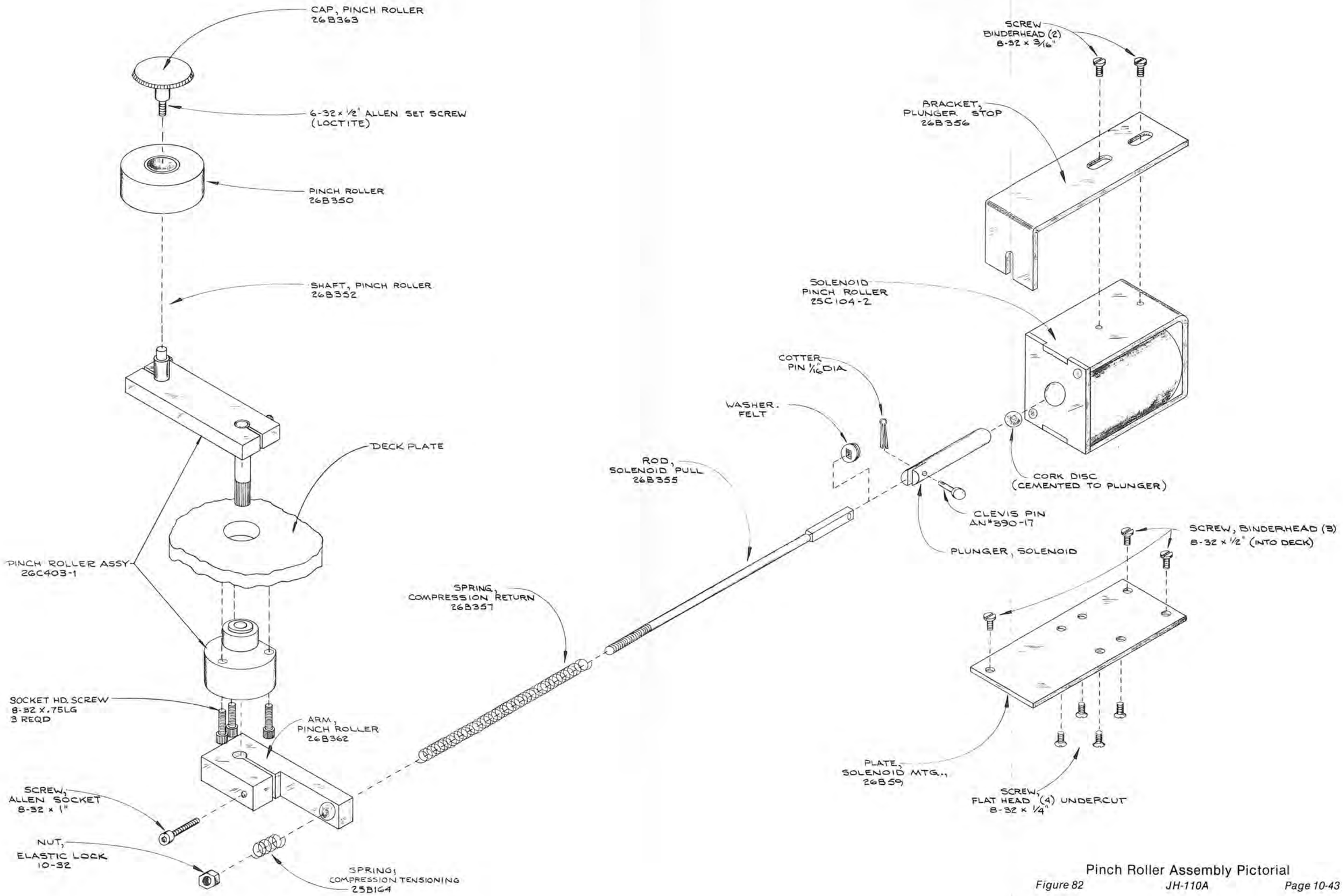

Pinch Roller Assembly Pictorial

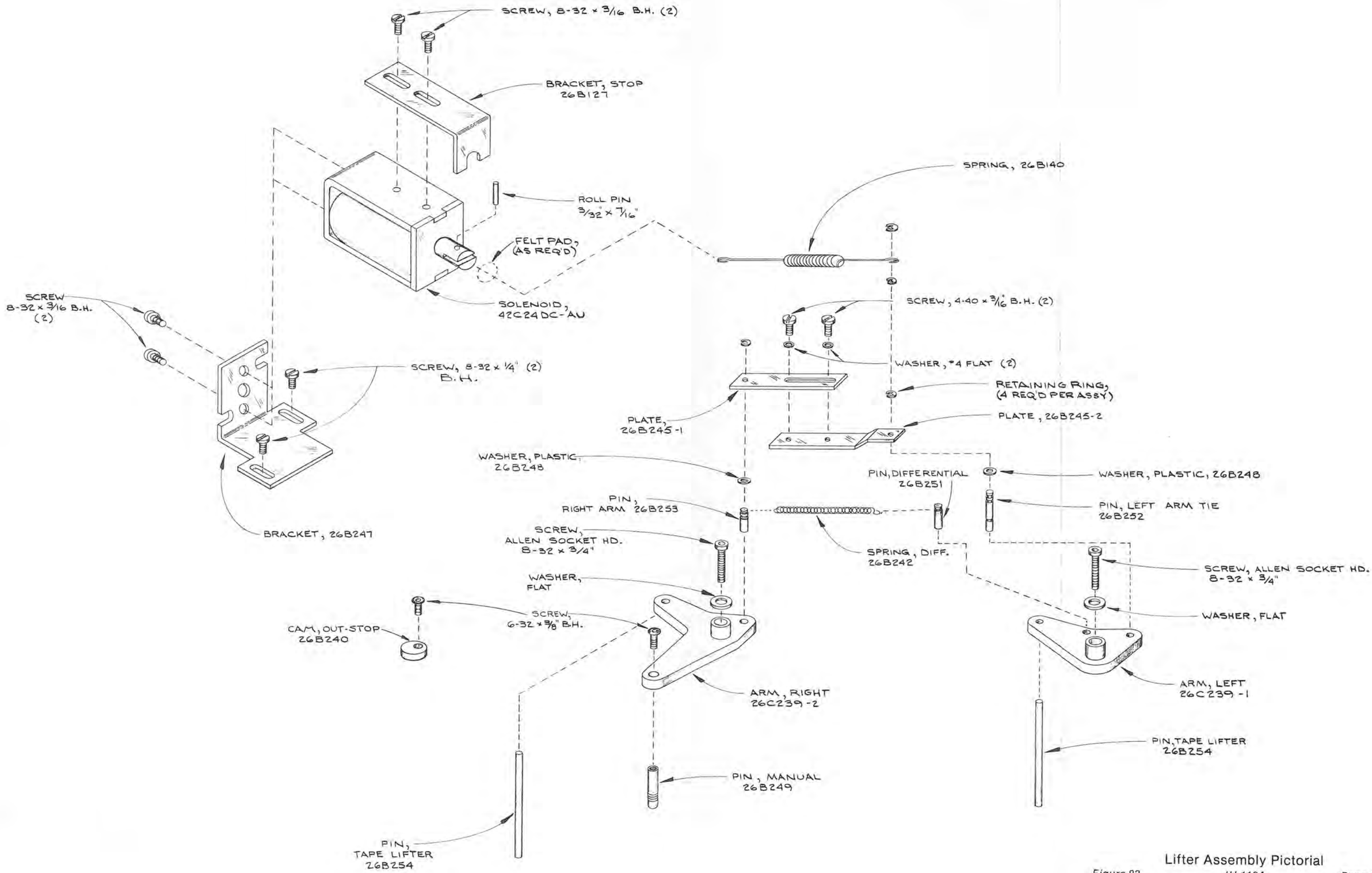

Lifter Assembly Pictorial

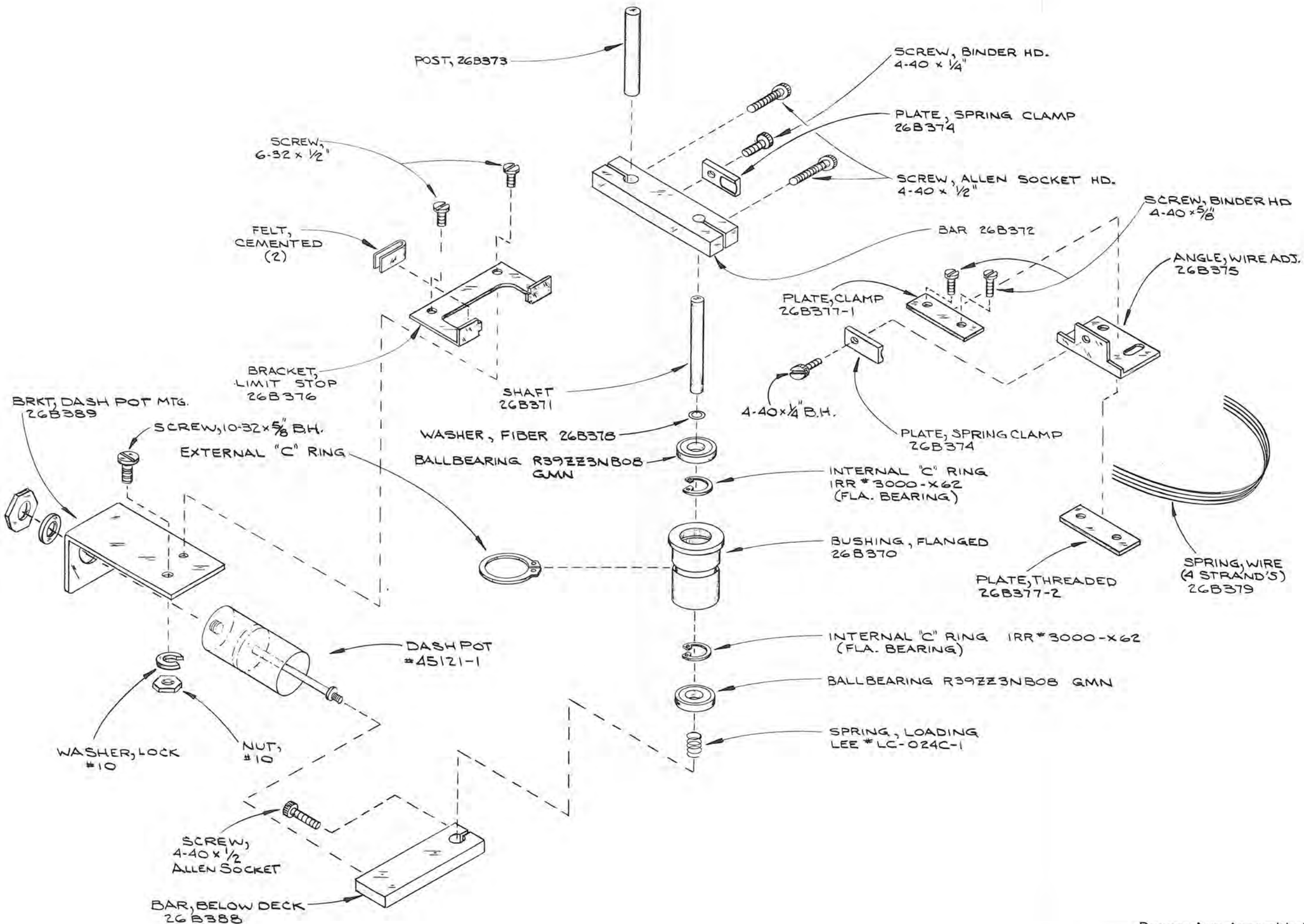

Dancer Arm Assembly Pictorial

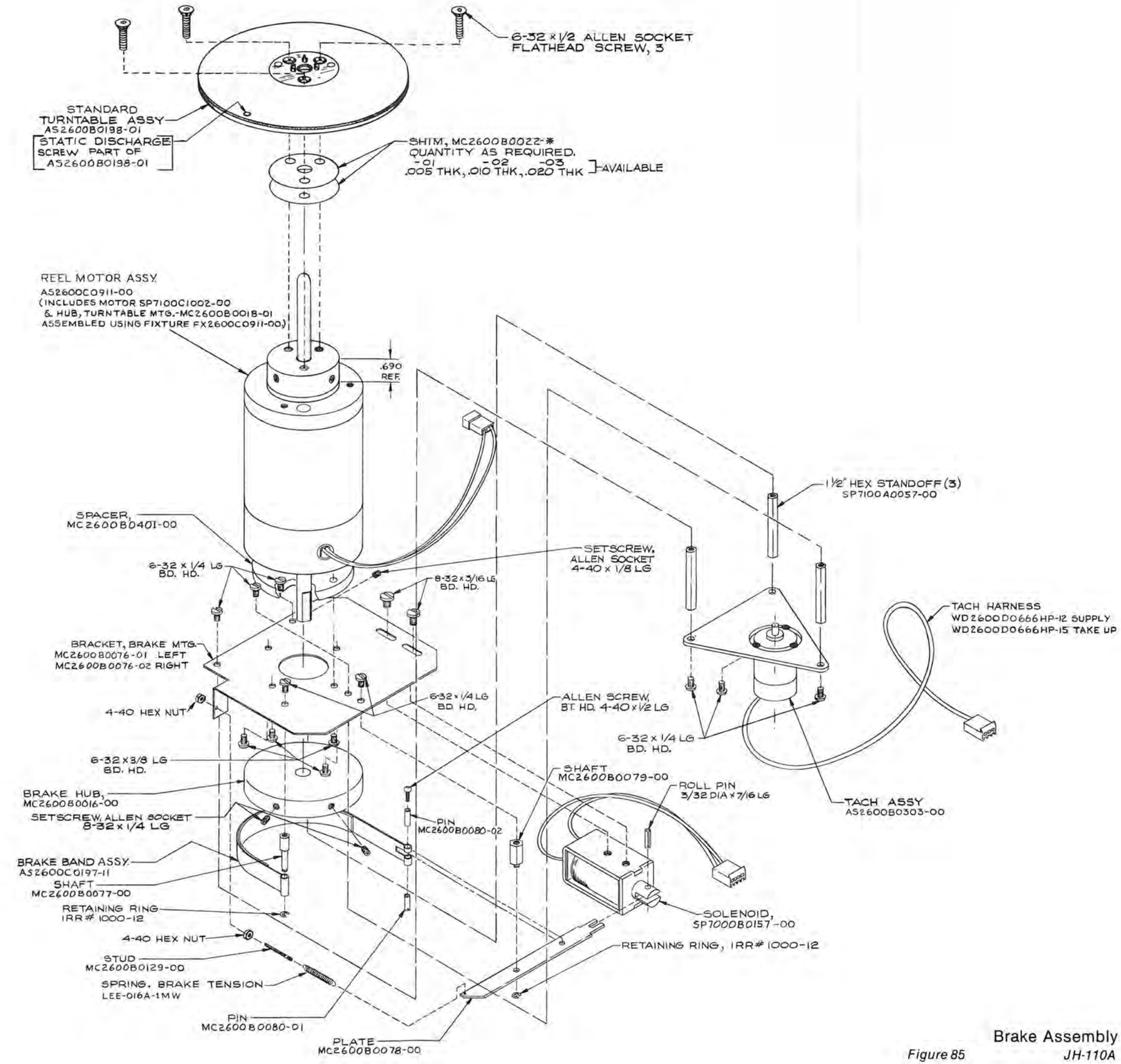

NOTE: APPLY "LIGHT" LUBRICANT TO ALL MOVING PARTS.

Brake Assembly Pictorial

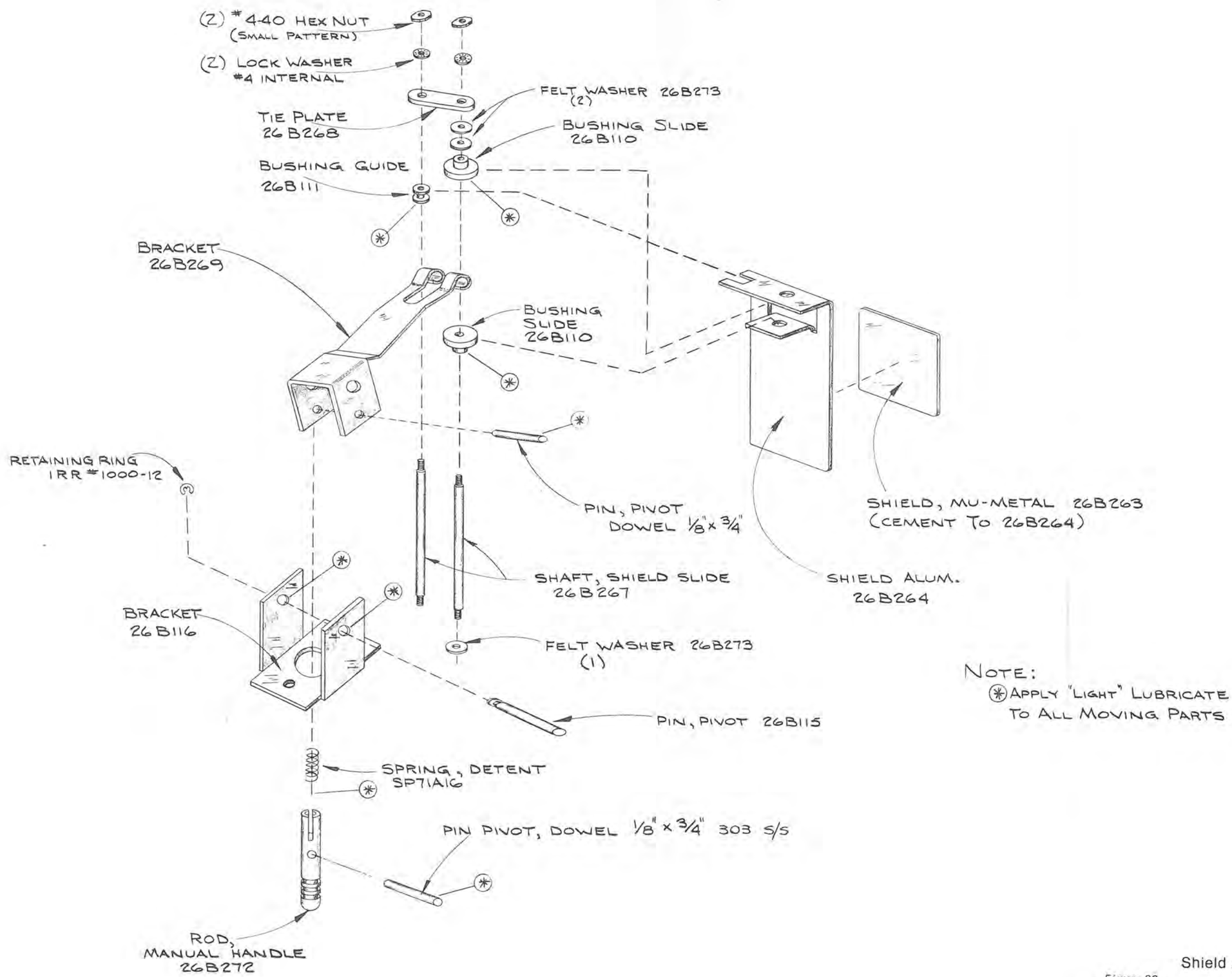

NOTE:
(*) APPLY "LIGHT" LUBRICATE TO ALL MOVING PARTS

Shield Assembly Pictorial

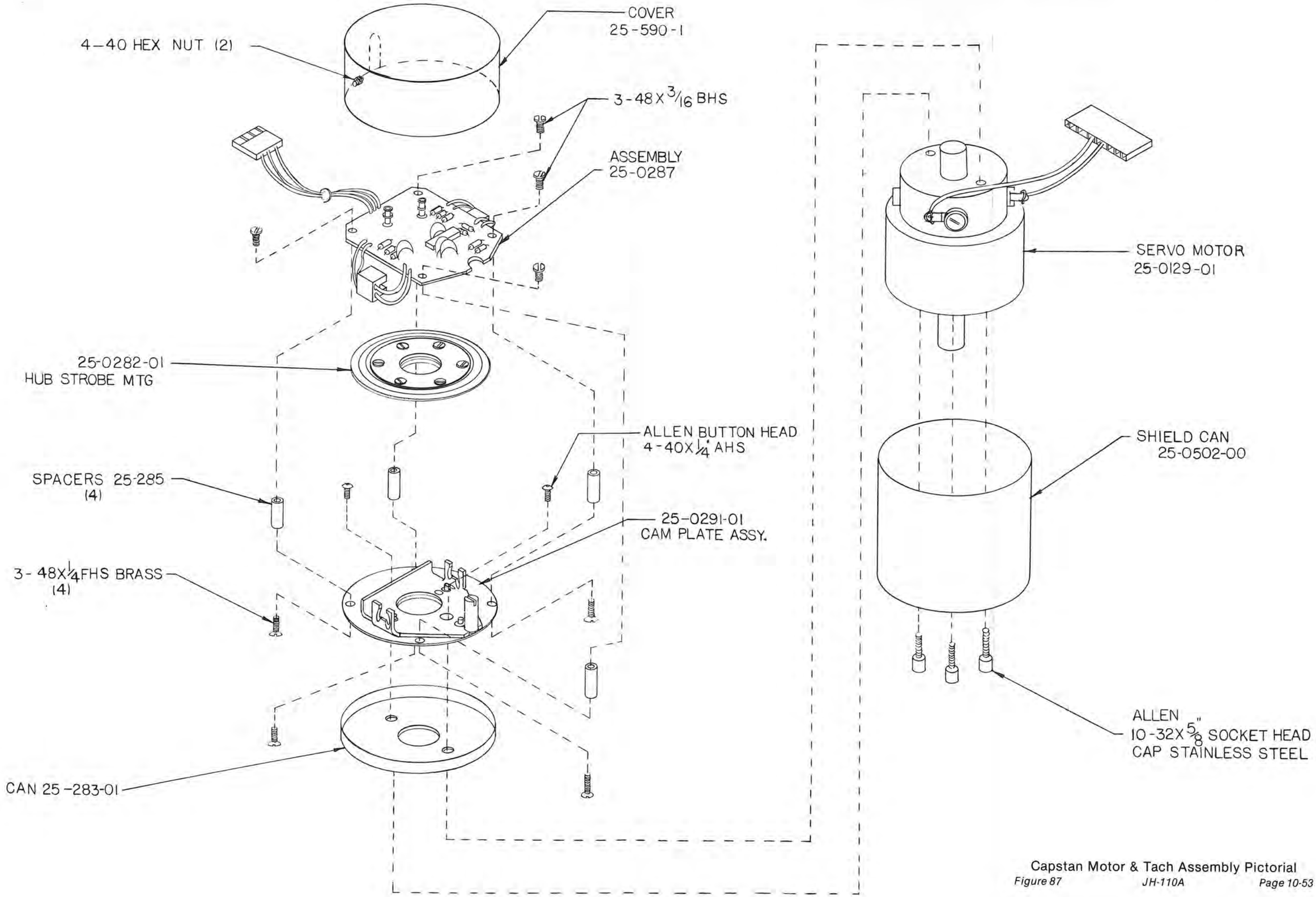

Capstan Motor & Tach Assembly Pictorial

SPARE PARTS

SPARE PARTS

.0 SPARE PARTS

The following four lists of spare parts are organized for four levels of support activity. List No. 1 is composed principally of the active components most often used. These are sometimes difficult to secure locally.

List No. 2 is the additional parts which we consider to be minimum for in-house repair departments.

List No. 3 is the additional parts which may be needed for emergency repair when time is an important factor.

List No. 4 is the optional parts which may be carried by the in-house repair department which is oriented toward heavy support of many machines.

Spare Parts List No. 1 *(Active components most used)*

Quantity	Description	Quantity	Description
4	NPC-139	1	7400
4	P1086	1	7402
3	2N5681-S39568	1	7408
3	2N5679-S39569	1	7404
2	2N2270	1	7410
2	2N5783	1	7420
2	2N3053	1	7432
1	2N4249	1	74COON
4	2N3055-H	4	741CP
1	2N4360	1	75454
1	2N4354	4	2003P
2	P1215E	1	7426
1	LM309KC-5	1	74122
1	LM340KC-18	1	7427
1	LM320KC-18	1	7493
1	LM340KC-15	1	74121
1	LM320KC-15	1	74123
4	1N4004	1	7495
1	1N5252B-24V	1	7490
1	1N5231B-5.1V	2	TLO81CP
2	1N34	1	NE566
2	1N914	1	MC1741-SCPI
1	1N5241-11V	1	TLO84CN
2	1N5245B-15V	2	2003M
1	UCTE-5-5V	2	1H5011
1	1N5243-13V	1	74192
1	7447	1	74193
1	0.15-OHM 10%-3WW	2	0.18-OHM 10%-2WW

Spare Parts List No. 2 *(Minimum for in-house repairs)*

1	HC4E-24VDC Relay	2	L41-1-0-000A Amber LED
1	K4E24V-9 Relay	2	L41-4-0-000A Grn LED
1	OPB-1034 Tape Sensor	1	F4UEE Sw
1	OPB-125 Count Sensor	2	MST-105D Sw
8	7387-PS Lamp	1	SWA-0007 Sw
4	01-903 Lamp	1	SWA-0006 Sw

1	01-121 Sw	1	CH8373-K7 Sw
1	01-151 Sw	2	MDL-4 Fuse
2	L41-2-0-000A Red LED	2	F2UEE Sw
1	PCA2700B0051 Ext. Bd.	1	PCA2700B0053 Ext. Bd.
1	PCA2700B0052 Ext. Bd.		

Spare Parts List No. 3 *(Emergency repairs)*

1	Control Logic Board	1	Record Board
1	Phase Locked Loop Board	1	Bias Board
1	Lamp Driver Board	1	Buss Board W/Oscillator
1	Analog Torque Board	1	JH-110 Chimney
1	Brake Solenoid Driver	1	VU Meter
1	Reproduce Board	1	Pinch Roller
		1	Beckman Tach Generator

Spare Parts List No. 4 *(Optional parts for heavy support)*

1	RTZ Assembly	1	Molex Crimp tool
1	Logic Annunciator	1	Selection of Molex Strips
1	Capstan Motor W/Tach	1	Mother Board Assembly
1	Torque Motor W/Tach	2	Black Knobs
1	Tape Lifter Solenoid	2	Black FM Black Buttons
1	Brake Solenoid	1	Head Stack Mounting
1	Pinch Roller Solenoid	1	JH-110 Power Supply
1	Reference Switch	1	¼ inch Roller Guide
1	Speed Switch	1	½ inch Roller Guide
1	Vari Speed Potentiometer	1	MVC Assembly
1	Dancer Arm Dash Potentiometer		

When ordering a PC board to replace an existing board or to use as a spare, be sure to specify:

Product _____
PC board function _____
PC board No. _____
Revision letter _____

UPGRADING

UPGRADING

12.0 UPGRADING KITS

MCI builds 5 systems in the JH-110 Series of Professional Tape Recorders—the JH-110A, JH-110A-14, JH-110A-8, JH-110M, and JH-110BC. Refer to Section 2.8, page 2-5 for details. Most of these systems are available in various track configurations and can be converted or upgraded to any other model with the exception that the transport *size* may not be changed. *e.g.* a JH-110A or a JH-110A-14 can be changed as follows. A mono, play only, unmounted may be changed to a 4 track, record and play in a variable profile cabinet. This conversion may be done in the field by buying the necessary add-on components. Exceptions are:

A. JH-110A-8 which can only be changed to a 4 track on ½" tape (kit JH-110A-8/4-C/K).
B. JH-110BC which is a stereo recorder only.
C. JH-110M which can only be upgraded from a mono system to a stereo system.

MCI's Customer Service Department can furnish Upgrading Kits to make model changes.

NOTE:
WHENEVER POSSIBLE, COMPONENTS AND ASSEMBLIES SHIPPED FOR UPGRADING A MACHINE ARE PRE-ADJUSTED AND PRE-ALIGNED AT THE FACTORY.

12.1 UPGRADING A MONO MACHINE TO A STEREO MACHINE

No change in tape width.

Parts needed:

1 — Repro Board
1 — Record Board
1 — Bias Board
1 — Record/Play Mother Board
1 — 2 Track Head Assembly
1 — Stereo Head Cable

Installation

1. Be sure power is turned OFF.
2. Remove the filler panel from the electronics drawer.
3. Install the new Mother Board, being very careful to make proper plug-in connections to the Strip board at the rear.
4. Mount the Mother board by installing the four 4/40 screws through the board into the standoffs provided.
5. Install the two 6/32 Allen Head screws through the new front panel.
6. Remove mono head cable and replace with newly supplied stereo head cable.
7. Remove the Mono Head assembly by loosening the two Allen screws which run through the Fixed Tape Guides.
8. Install the new Head assembly.

IN ALL THE ABOVE STEPS, COPY CAREFULLY THE EXISTING CHANNEL.

12.2 UPGRADING A 2 TRACK MACHINE TO A 4 TRACK MACHINE

Changing from ¼ inch tape to ½ inch tape.

Parts needed.

1 — Drawer assembly with 2 tracks of Record/Play electronics.
Included in this assembly are:
1 — Mechanical drawer assembly
2 — Audio Mother Board assemblies
1 — Strip Board less oscillator

2 — Record Boards
2 — Repro Boards
2 — Bias Boards
2 — Front panel assemblies
1 — 4 track Head assembly
2 — ½ inch Roller Guides
1 — Power Supply to Electronics cable
1 — 4 channel head cable assembly

Installation

1. Be sure power is turned OFF.
2. Remove the lower filler panels from the cabinet.
3. Install the new Electronics Drawer assembly. This assembly will have been completely checked and aligned.
4. Remove existing head cable and install newly supplied 4 channel head cable.
5. Remove the 2 track Head assembly by loosening the two Allen screws which run through the Fixed Tape Guides.
6. Install the new 4 track Head assembly.
7. Remove the two ¼ inch Roller Guides.
8. Install the two new ½ inch Roller Guides.
9. Install the Power Supply to the Electronics Cable to the new drawer.

IN ALL THE ABOVE STEPS, COPY CAREFULLY THE EXISTING CHANNELS.

NOTE:
It is considered advisable that Head Wrap adjustments be checked after installation of any Upgrading Kit. This adjustment is covered fully in the Maintenance Section (5) of this manual.

12.3 INSTALLING ADDITIONAL PLAY HEAD & PLAY ONLY CHANNEL

Parts Needed

1 — Mono or 2 track head nest assembly including head and mounting blocks
1 — Single channel play only electronics *(Bias and Record Boards deleted)*
1 — 4 channel head cable assembly

OR

1 — Drawer assembly with 2 tracks play only electronics.
1 — 4 channel head cable assembly

Installation

The Head Nest must be installed in your existing Head assembly. Refer to page 10-47 for a pictorial assembly drawing.

The electronics and head cables are installed in the same way as described above in sections 12.1 and 12.2.

Head height, Azimuth, and Wrap adjustments must be checked after this installation. Instructions are included in the Maintenance section (5) of this manual.

Electronic adjustments will have been made before the Kit is shipped to you.

INSTALLATION

INSTALLATION

13.0 UNPACKING AND ASSEMBLY INSTRUCTIONS

UNPACKING AND ASSEMBLY WORK SHOULD BE DONE BY MCI APPROVED DEALERS ONLY.

CAUTION:

DO NOT REMOVE this tape recording system from the shipping cartons except in the manner and in the order described in these instructions:

STEP 1
Open the SMALL carton. It should contain:

- A manual
- A power cable
- Small options which have not been installed on the machine.

STEP 2
Cut the four straps on the LARGE carton. Slit the sealing tape on the carton seams. Open and remove all ethafoam padding. Bend flaps downward and lift carton STRAIGHT UP. DO NOT ATTEMPT TO REMOVE CARTON WITHOUT FIRST OPENING AND REMOVING PACKING MATERIAL. Lift machine from skid and shipping base.

STEP 3
Stand the machine on its casters.

STEP 4
Check the power selector switch and fuse. Set the correct switch position for your supply voltage. Be sure that the fuse is the correct value:

Switch Position	Fuse
100V	MDL 4 Amp
110V	MDL 4 Amp
220V	MDL 2 Amp

The JH-110A without a variable profile cabinet is shipped with mounting hardware.